Workshop Manual

Octavia 1997 ➤

1.9 l/96 kW (TDI) Engine, Mechanics
Edition 04.03

Engine code	ASZ								

Printed in Czech Republic
S00.5142.50.20

The Workshop Manual is intended only for use within the Organisation Škoda.
It is not permitted to pass it on to other persons.

Printed in Czech Republic
S00.5142.50.20

© ŠKODA AUTO a. s.

List of Supplements to Workshop Manual

Octavia 1997 ➤

1.9 l/96 kW (TDI) Engine, Mechanics

Edition 04.03

Supple-ment	Edition	Subject	Article Number
	04.03	Basic Edition	S00.5142.50.20
1	09.04	Modifications in Rep. Gr. 13, 20, 21 and 26	S00.5142.51.20

Table of Contents

00 – Technical Data

Technical Data ..... **00-1** page 1

10 – Removing and Installing Engine

Removing and Installing Engine ..... **10-1** page 1

13 – Crankgear

Removing and installing V-ribbed belt ..... **13-1** page 1

Removing and installing, tightening the timing belt ..... **13-2** page 1

- Summary of components ..... **13-2** page 1
- Removing and installing, tightening the timing belt ..... **13-2** page 2

Removing and installing sealing flange and flywheel ..... **13-3** page 1

Crankshaft, Piston and Conrod ..... **13-4** page 1

15 – Cylinder Head, Valve Gear

Removing and installing cylinder head ..... **15-1** page 1

Repairing Valve Gear ..... **15-2** page 1

Camshaft ..... **15-3** page 1

Valve seats, valves guides, valve stem seals ..... **15-4** page 1

17 – Lubrication

Removing and installing parts of the lubrication system ..... **17-1** page 1

Removing and installing oil pan ..... **17-2** page 1

Testing oil pressure and oil pressure switch ..... **17-3** page 1

19 – Cooling

Parts of cooling system - Summary of components ..... **19-1** page 1

Removing and installing radiator, coolant pump and coolant thermostat ..... **19-2** page 1

20 – Fuel Supply

Removing and installing parts of the fuel supply system ..... **20-1** page 1

- Safety precautions when working on the fuel supply system ..... **20-1** page 1
- Rules of cleanliness ..... **20-1** page 1
- Removing and installing the fuel tank with its component parts ..... **20-1** page 2
- Removing and installing the fuel tank ..... **20-1** page 4
- Removing and installing fuel filter ..... **20-1** page 5
- Removing and installing fuel cooler ..... **20-1** page 6
- Check the fuel delivery unit ..... **20-1** page 6
- Removing and installing the fuel delivery unit ..... **20-1** page 8
- Removing and installing the fuel gauge sender ..... **20-1** page 9
- Removing and installing the tandem pump ..... **20-1** page 10
- Inspecting a tandem pump ..... **20-1** page 11

Servicing accelerator pedal ..... **20-2** page 1

- Removing and installing the accelerator control ..... **20-2** page 1

21 – Turbocharging

Charge air system with turbocharger I ..... **21-1** page 1

- Removing and installing exhaust turbocharger with component parts ..... **21-1** page 1
- Removing and installing parts of the charge air cooling ..... **21-1** page 3
- Removing and installing charge-air cooler ..... **21-1** page 3
- Rules of cleanliness ..... **21-1** page 4
- Connection diagram for vacuum hoses ..... **21-1** page 5

Charge air system with turbocharger II ..... **21-2** page 1
- Remove exhaust turbocharger ..... **21-2** page 1
- Checking charge pressure control ..... **21-2** page 1

26 – Exhaust System

Removing and installing parts of the exhaust system ..... **26-1** page 1
- Removing and installing front exhaust pipe with catalytic converter ..... **26-1** page 2
- Replace connecting tube and rear silencer ..... **26-1** page 3
- Aligning exhaust system free of stress ..... **26-1** page 3
- Checking the exhaust system for leaks ..... **26-1** page 4

Exhaust gas recirculation system ..... **26-2** page 1
- Testing mechanical exhaust gas recirculation valve ..... **26-2** page 2

00 – Technical Data

00-1 Technical Data

Engine number

The engine number („engine identification characters“ and „serial number“) is located in the front at the engine/ gearbox joint -arrow-.

In addition, a sticker with the „engine identification characters“ and „serial number“ is affixed to the timing belt guard.

The engine identification characters are also indicated on the vehicle data stickers.

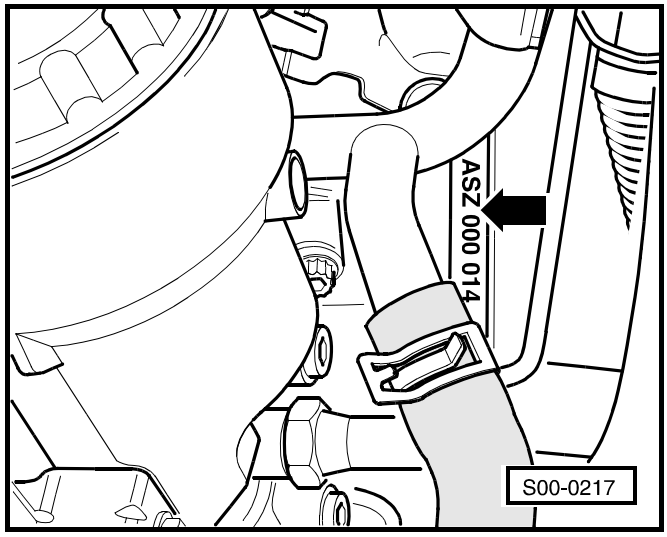

Engine characteristics

Engine identification characters		ASZ
Manufactured		12.02 ➤
Exhaust limits conforming to		EU-3
Displacement	l	1.896
Power output	kW at rpm	96/4000
Torque	Nm at rpm	310/1900
Bore	∅ mm	79.5
Stroke	mm	95.5
Compression		19.0 : 1
Firing order		1-3-4-2
min. CN		49
Catalytic converter		yes
Exhaust gas recirculation		yes
Turbocharging		yes
Charge air cooler		yes

10 – Removing and Installing Engine

10-1 Removing and Installing Engine

⇒ 1.9 l/74 kW (TDI) Engine, Mechanics; Rep. Gr. 10

13 – Crankgear

13-1 Removing and installing V-ribbed belt

⇒ 1.9 l/74 kW (TDI) Engine, Mechanics; Rep. Gr. 13

13-2 Removing and installing, tightening the timing belt

Summary of components

Note

Before removing the timing belt, mark direction of running. Reversing the rotation direction of an already used belt may destroy it.

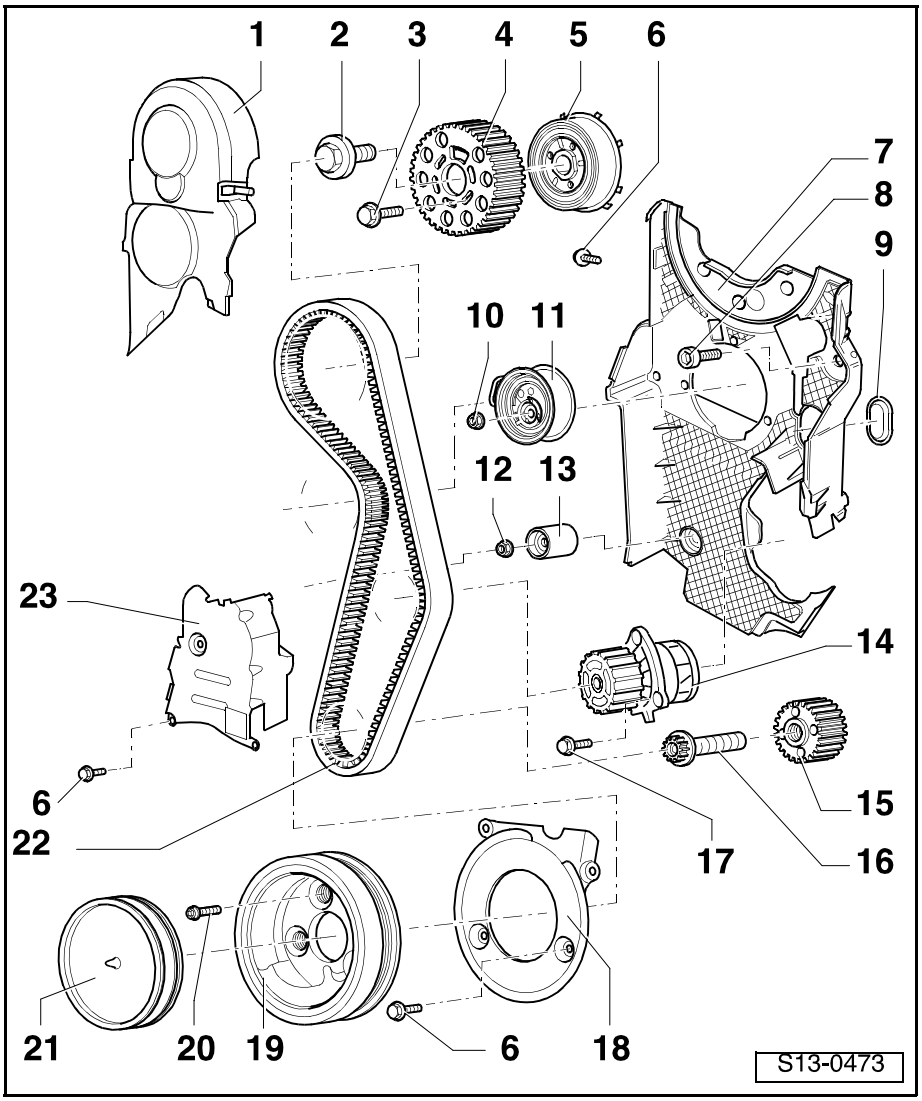

1 - **Top toothed belt guard**
- ❑ when installing, correctly insert into the middle toothed belt guard

2 - **100 Nm**
- ❑ to release and tighten use counterholder -T10051 -

3 - **20 Nm + torque a further + 45 ($^1/_8$ turn)**

4 - **Camshaft sprocket**
- ❑ Mark installation position

5 - **Hub**
- ❑ with sensor rotor for Hall sensor -G40-
- ❑ to release and tighten use counterholder -T10051 -
- ❑ to remove use extractor -T10052-
- ❑ removing and installing ⇒ Chapter 15-2

6 - **10 Nm**
- ❑ insert using locking agent -D 000 600 A2-

7 - **Rear timing belt guard**
- ❑ to remove, unscrew coolant pump
- ❑ when installing, correctly insert into the front sealing flange

8 - **25 Nm**

9 - **Rubber bush**
- ❑ replace if damaged

10 - **20 Nm + torque a further + 45 ($^1/_8$ turn)**

11 - **Tensioning pulley**

12 - **22 Nm**

13 - **Guide pulley**

14 - **Coolant pump**
- ❑ removing and installing ⇒ Chapter 19-1

15 - **Crankshaft toothed belt sprocket**
- ❑ there must not be any oil present on contact surface between timing belt sprocket and the crankshaft
- ❑ can be installed only in one position

16 - **120 Nm + torque a further 90 ($^1/_4$ turn)**
- ❑ replace
- ❑ do not oil
- ❑ to release and tighten use counterholder -T30004 -

17 - **13 Nm**

18 - Bottom toothed belt guard

19 - Belt pulley with vibration damper

- ❑ Assembly only possible in one position - holes offset
- ❑ with notch for TDC of cyl. 1.

20 - 10 Nm + torque a further 90 ($^1/_4$ turn)

- ❑ replace

21 - Cap

22 - Timing belt

- ❑ mark the direction of rotation with chalk or a felt-tip pen before removing
- ❑ check for wear
- ❑ do not kink
- ❑ removing and installing (setting the timing) ⇒ **13-2** page 2

23 - Middle toothed belt guard

- ❑ with notch for TDC of cyl. 1 or with marked arrow

Removing and installing, tightening the timing belt

Note

The adjusting work at the timing belt must only be carried out when engine is cold.

Special tools, test and measuring equipment and auxiliary items required

- Torque wrench
- Rig pin -MP 1-301- or - 3359-
- Supporting device -MP 9-200- with adapter -MP 9-200/3-
- Crankshaft arrester -T10050-
- Wrench for tensioning pulleys (e.g. -Matra V 159-, -T10020-, -Hazet 2587 - or -Stahlwille 127-17-)

Removing

– Remove the V-ribbed belt ⇒ Chapter 13-1.

– Remove ribbed V-belt tensioning device.

– Remove the front right wheelhouse liner ⇒ Body Work; Rep. Gr. 66.

WARNING!

Fuel feed line is pressurized. Place cleaning cloths around the connection point before detaching hose connections. Reduce pressure by carefully removing the hose.

– Remove the fuel filterm, disconnect the fuel-intake hose -1- and the fuel-return hose -2- from the pipes.

– Remove top charge air pipe ⇒ Chapter 21-1.

– Remove coolant expansion reservoir and place down to the front with coolant hoses connected.

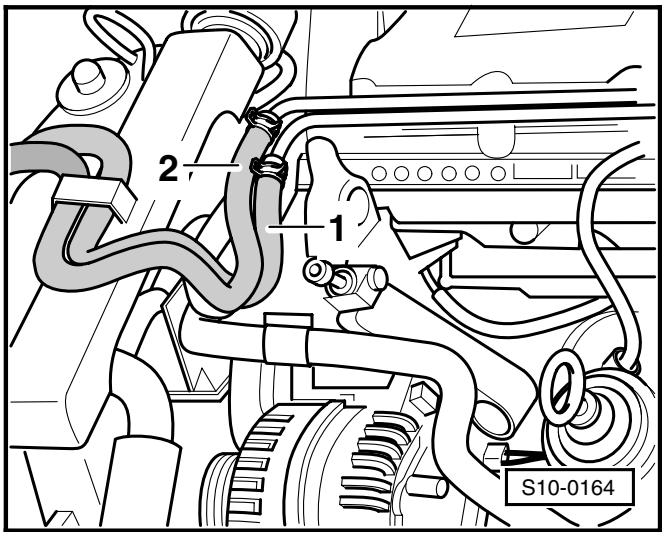

– Remove power-steering reservoir, do not detach hoses however, and place down to the side.
– Fit on supporting device -MP 9-200- in combination with adapter -MP 9-200/3-.
– Removing engine mounting ⇒ Chapter 10-1.
– Remove top toothed belt guard.
– Remove belt pulley with vibration damper.
– Remove middle and bottom timing belt guard.
– Position crankshaft on TDC cylinder 1.

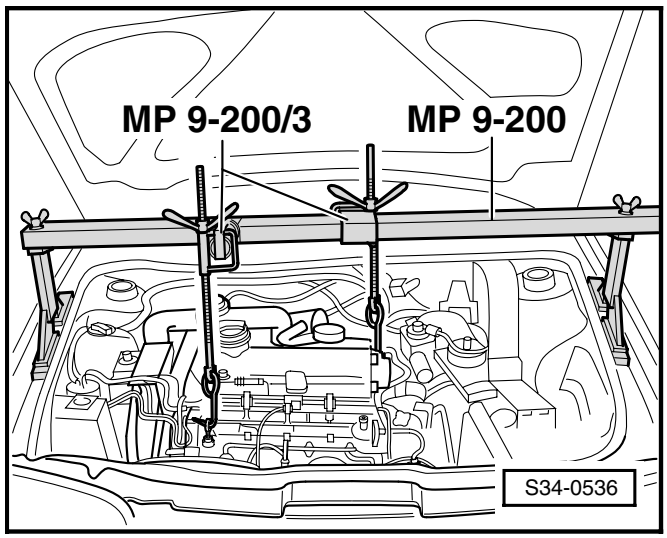

Note

Rotate crankshaft until the marking on the top of the timing belt sprocket and the arrow on the rear timing belt guard are positioned opposite the lugs on the hub of the sense rotor -arrows-.

– Lock hub with locking pin -MP 1-301- or - 3359-. Insert locking pin through the left slot into the hole at the cylinder head.
– Secure the timing belt sprocket-crankshaft with the crankshaft arrester -T10050 -. Insert the crankshaft arrester from the front side of the timing belt sprocket into the gearing.

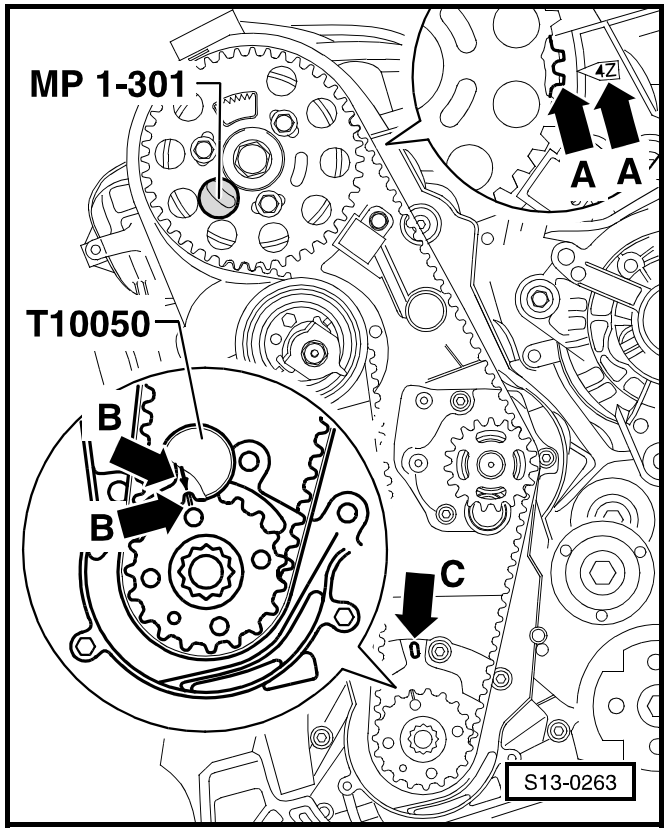

Note

The markings on the timing belt gear and on the crankshaft arrester must be in line with each other. The pin on the crankshaft arrester must engage into the opening in the sealing flange.

– Mark the direction of rotation of the timing belt with chalk or a felt-tip pen.
– Slacken bolts of camshaft sprocket -arrows-.

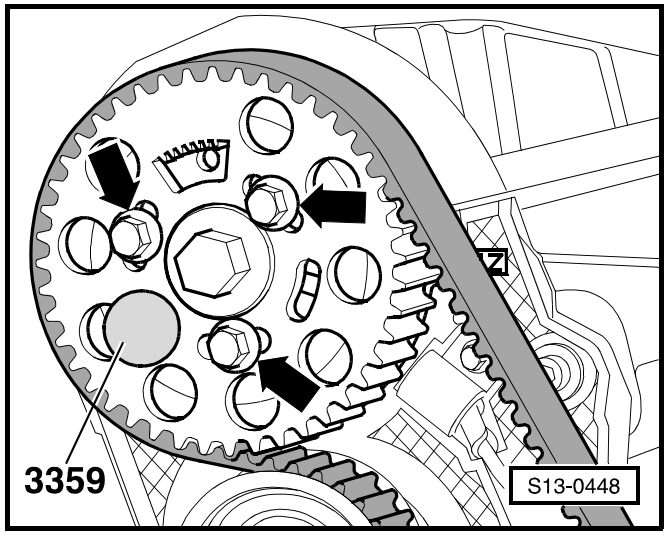

– Counterhold eccentric of tensioning pulley with two-hole nut turner (e.g. -T10020-) and loosen the fixing nut -1-. After this, release the tensioning pulley by turning the eccentric anti-clockwise, until spring tension releases. Secure the loose tensioning pulley by tightening the fixing nut by hand.

– Remove toothed belt guide pulley ⇒ item 13 in **13-2** page 1.

– First of all take toothed belt off toothed belt sprocket of coolant pump and then from the other belt pulleys.

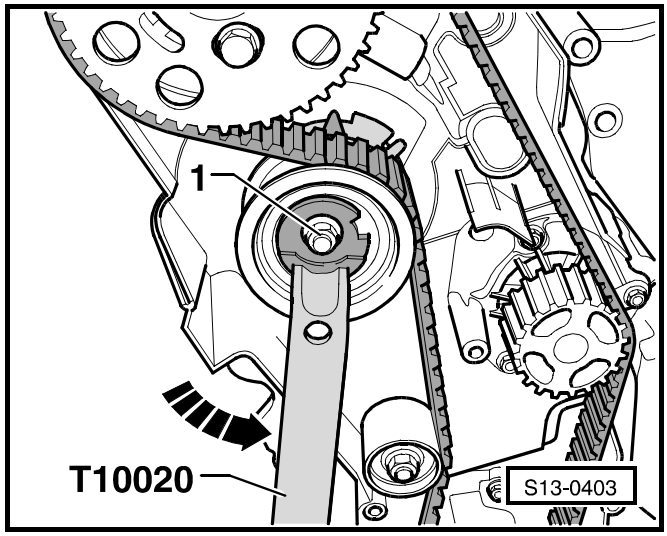

Installing and tensioning

Note

- *The adjusting work at the timing belt must only be carried out when engine is cold.*
- *When rotating the camshaft, the crankshaft must not be positioned at TDC for any one piston. Risk of damaging valves and pistons.*

- Interlock camshaft with locking pin e. g. -3359- or -MP 1-301-.
- Interlock the crankshaft with the crankshaft arrester -T10050-.
- Interlock tensioning pulley in released position with fixing nut.

– Pay attention to correct fitting of the tensioning pulley in the rear timing belt guard -arrow-.

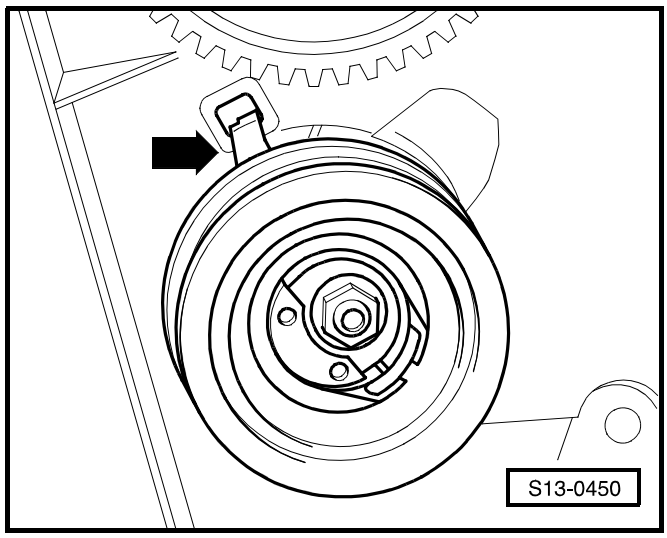

– Slightly screw in screws -arrows-.

- It must still be possible to turn the camshaft sprocket on the hub, however it must not hang loose.

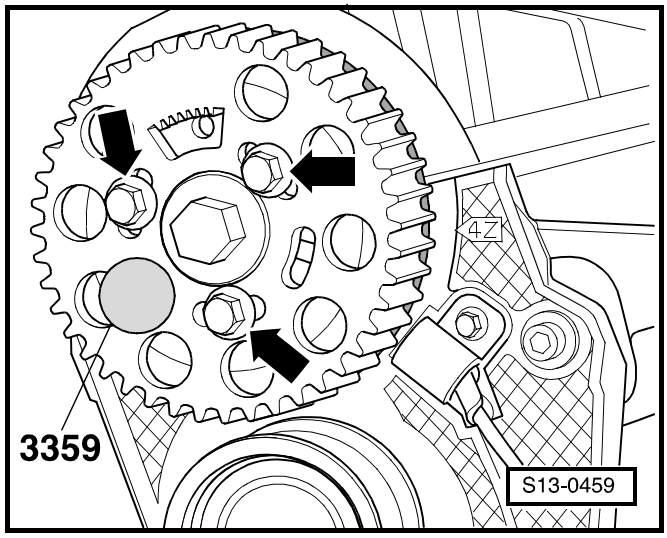

– Turn camshaft sprocket clockwise in the elongated holes as far as the stop.
– Fit toothed belt onto crankshaft toothed belt sprocket, tensioning pulley, camshaft and, last of all, onto the toothed belt sprocket of the coolant pump.
– Install toothed belt guide pulley ⇒ item 13 in **13-2** page 1.
– Loosen the fixing nut -1- of the tensioning pulley. ►
– Turn the eccentric of the tensioning pulley with two-hole nut turner (e. g. -T10020-) clockwise in such a way until the pointer -2- stands in the centre of the base plate in the gap.

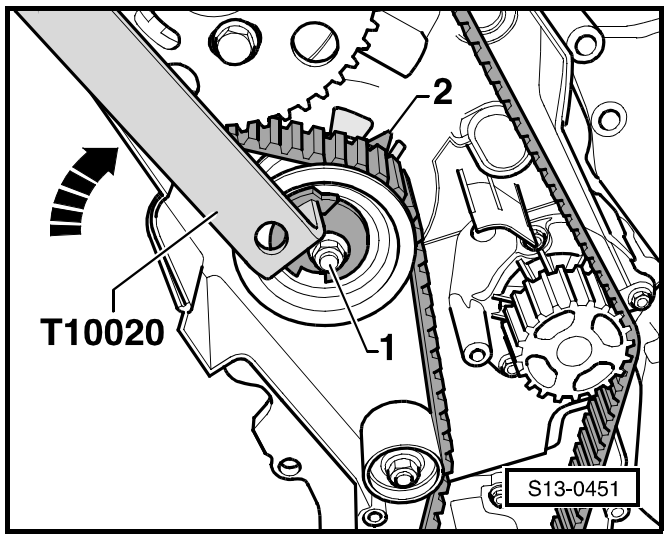

Note

Ensure that the fixing nut does not turn.

– Hold the eccentric of the tensioning pulley in this position and tighten fixing nut to 20 Nm + torque a further 45° ($^1/_8$ turn). ►

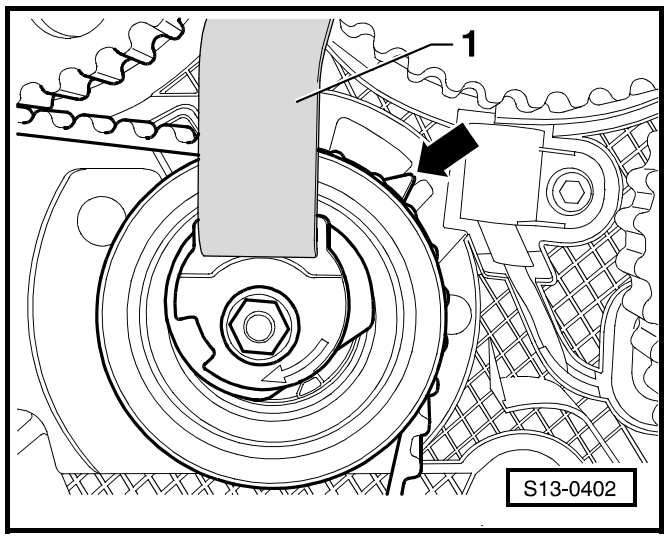

Note

When tightening the fixing nut, the pointer turns -arrow- max. 5 mm to the right from the gap of the base plate. This position must not be corrected, because the toothed belt settles when running-in.

– Tighten bolts of camshaft sprocket to 20 Nm + torque a further 45° ($^1/_8$ turn).
– Remove locking pin -3359- and crankshaft arrester -T10050-.

Test timing:

– Turn crankshaft 2 turns in the direction of running of the engine until the crankshaft is positioned shortly before TDC for cylinder 1.
– Interlock during this motion the hub in the direction of running of the engine with locking pin -3359- . ►

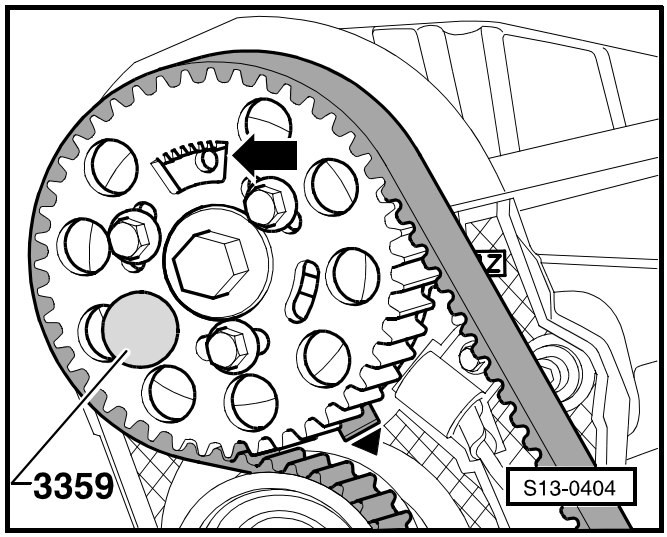

– Check whether:

- the crankshaft can be interlocked with the crankshaft arrester -T10050 -;
- Pointer of tensioning pulley stands in the centre or max. 5 mm to the right from the gap of the base plate.

If the crankshaft cannot be arrested:

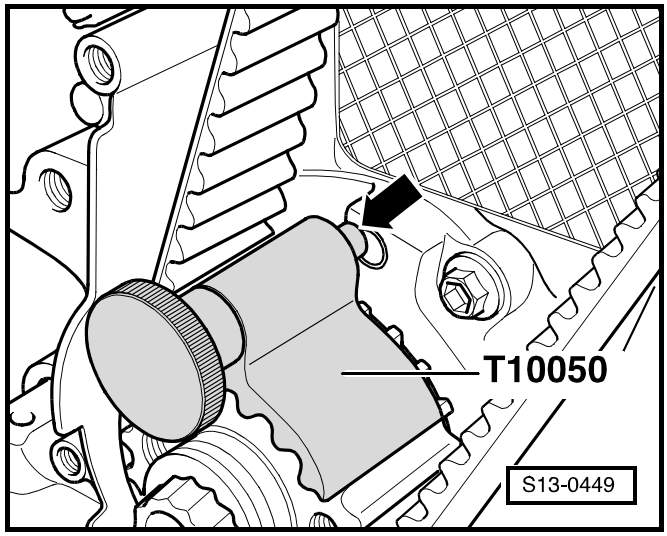

– Slacken bolts of camshaft sprocket -arrows-.

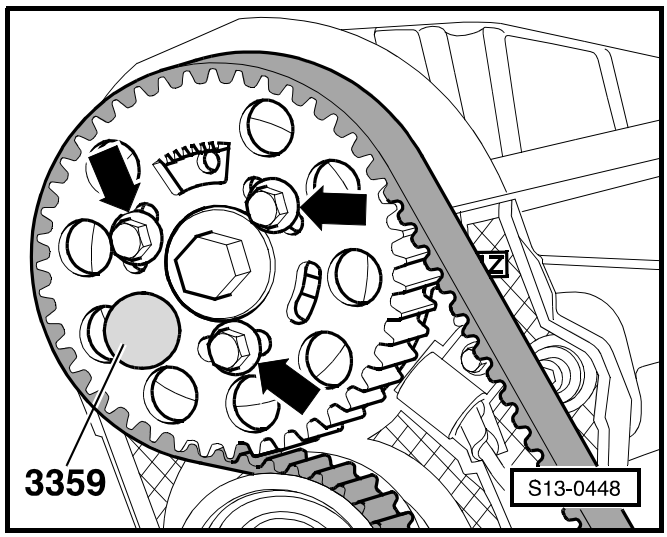

– Rotate crankshaft in direction of rotation of engine until it can be arrested with the crankshaft arrester -T10050-.

Note

If the crankshaft can be turned behind the TDC for cylinder 1, turn crankshaft back slightly and once again set to the TDC for cylinder 1 by turning in direction of rotation of engine.

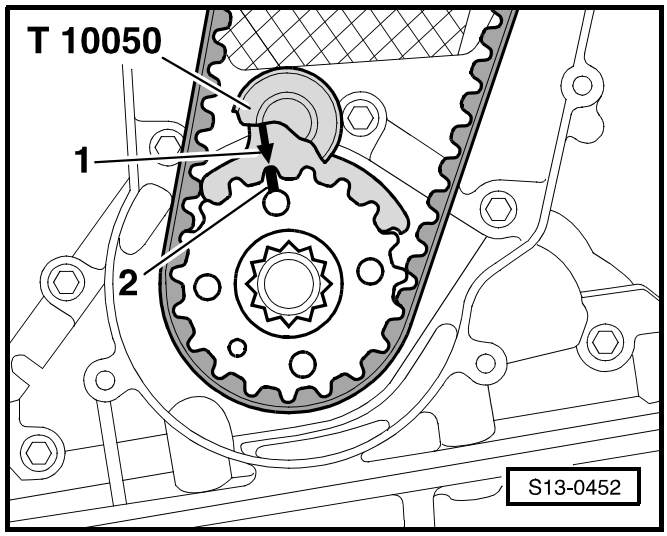

– Tighten bolts -arrows- of camshaft sprocket to 20 Nm + torque a further 45° ($^1/_8$ turn).

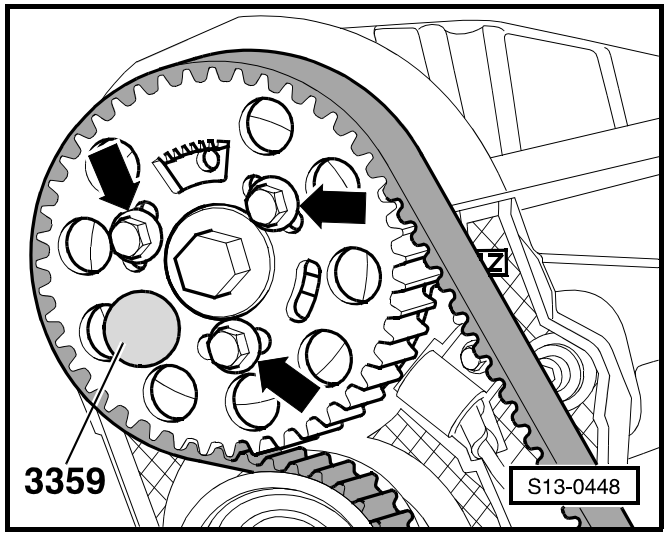

– Remove locking pin -3359- and crankshaft arrester -T10050-.

– Turn crankshaft 2 turns in the direction of running of the engine until the crankshaft is on TDC.

– Repeat timing test.

Proceed with installation:

Further installation occurs in reverse order for removal, while paying attention to the following:

Note

- *Replace gaskets.*
- *Pay attention to different hose connections. Secure all hose connections depending on the version with hose clips or retaining clips.*

– Install bottom and middle toothed belt guard.

– Install belt pulley with vibration damper.

– Install engine support. Screw in screws -1 ... 3- by hand first and then tighten to 45 Nm.

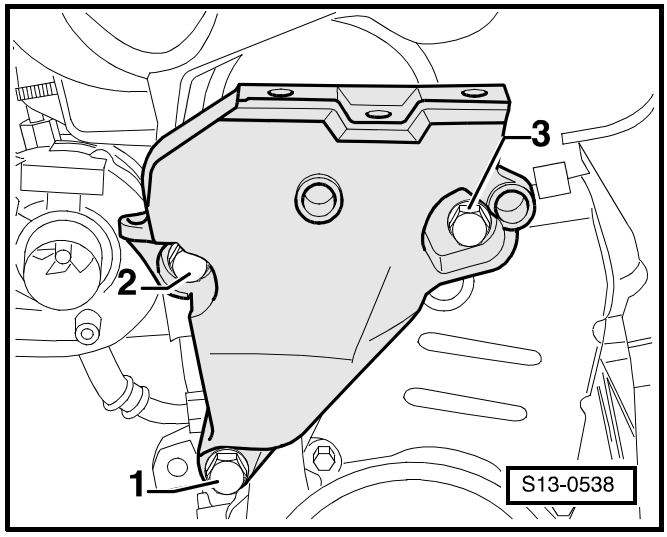

Note

The engine support must be tightened up firmly before further installation of the engine mounting.

– Install top toothed belt guard.

– Install and adjust the engine mounting ⇒ Chap. 10-1.

– Install tensioning device for V-ribbed belt. Tighten bolts to 25 Nm.

– Install the V-ribbed belt ⇒ Chapter 13-1.

– Install charge air pipes and charge air hoses ⇒ Chap. 21-2.

– Install fuel filter, coolant expansion reservoir and power-steering reservoir.

– Install the front right wheelhouse liner ⇒ Body Work; Rep. Gr. 66.

13-3 Removing and installing sealing flange and fly-wheel

⇒ 1.9 l/74 kW (TDI) Engine, Mechanics; Rep. Gr. 13

13-4 Crankshaft, Piston and Conrod

⇒ 1.9 l/74 kW (TDI) Engine, Mechanics; Rep. Gr. 13

15 – Cylinder Head, Valve Gear

15-1 Removing and installing cylinder head

⇒ 1.9 l/74 kW (TDI) Engine, Mechanics; Rep. Gr. 15

15-2 Repairing Valve Gear

⇒ 1.9 l/74 kW (TDI) Engine, Mechanics; Rep. Gr. 15

15-3 Camshaft

⇒ 1.9 l/74 kW (TDI) Engine, Mechanics; Rep. Gr. 15

15-4 Valve seats, valves guides, valve stem seals

⇒ 1.9 l/74 kW (TDI) Engine, Mechanics; Rep. Gr. 15

17 – Lubrication

17-1 Removing and installing parts of the lubrication system

⇒ 1.9 l/74 kW (TDI) Engine, Mechanics; Rep. Gr. 17

17-2 Removing and installing oil pan

⇒ 1.9 l/74 kW (TDI) Engine, Mechanics; Rep. Gr. 17

17-3 Testing oil pressure and oil pressure switch

⇒ 1.9 l/74 kW (TDI) Engine, Mechanics; Rep. Gr. 17

19 – Cooling

19-1 Parts of cooling system - Summary of components

⇒ 1.9 l/74 kW (TDI) Engine, Mechanics; Rep. Gr. 19

19-2 Removing and installing radiator, coolant pump and coolant thermostat

⇒ 1.9 l/74 kW (TDI) Engine, Mechanics; Rep. Gr. 19

20 – Fuel Supply

20-1 Removing and installing parts of the fuel supply system

Safety precautions when working on the fuel supply system

WARNING!

When undertaking all assembly work, particularly in the engine compartment due to its cramped construction, please observe the following:

Lay lines of all kinds (e.g. for fuel, hydraulic fluid, the active charcoal container-unit, cooling fluid and refrigerent, brake fluid, vacuum) and electrical lines in such a way that the original line guide is re-established.

Ensure that there is adequate free access to all moving or hot components.

When removing and installing the fuel gauge sender from a full or partly filled fuel tank, pay attention to the following:

- The extraction hose of an exhaust extraction system which is switched on, must be positioned close to the assembly opening of the fuel tank in order to extract the released fuel gases, even before the work is commenced. If no exhaust extraction system is available, a radial fan (motor not in air flow of fan) with a delivery volume above 15 m^3/h must be used.
- Avoid skin contact with fuel! Wear fuel-resistant gloves!

Rules of cleanliness

When working on the fuel supply/fuel injection system, pay careful attention to the following „6 rules“ for cleanliness.

- Thoroughly clean the connection points and their surroundings before releasing.
- Place removed parts on a clean surface and cover. Do not use fuzzy cloths!
- Carefully cover or close opened components if the repair is not completed immediately.
- Only install clean parts: Remove spare parts from their wrapping immediately before fitting. Do not use any parts which have been stored unwrapped, e.g. on a shelf or in a tool box.

- When the system is open: Avoid using compressed air. Avoid moving the vehicle.
- Also make sure no diesel fuel runs onto the coolant hoses. If this is the case clean the hoses immediately. Immediately replace contaminated hoses.

Removing and installing the fuel tank with its component parts

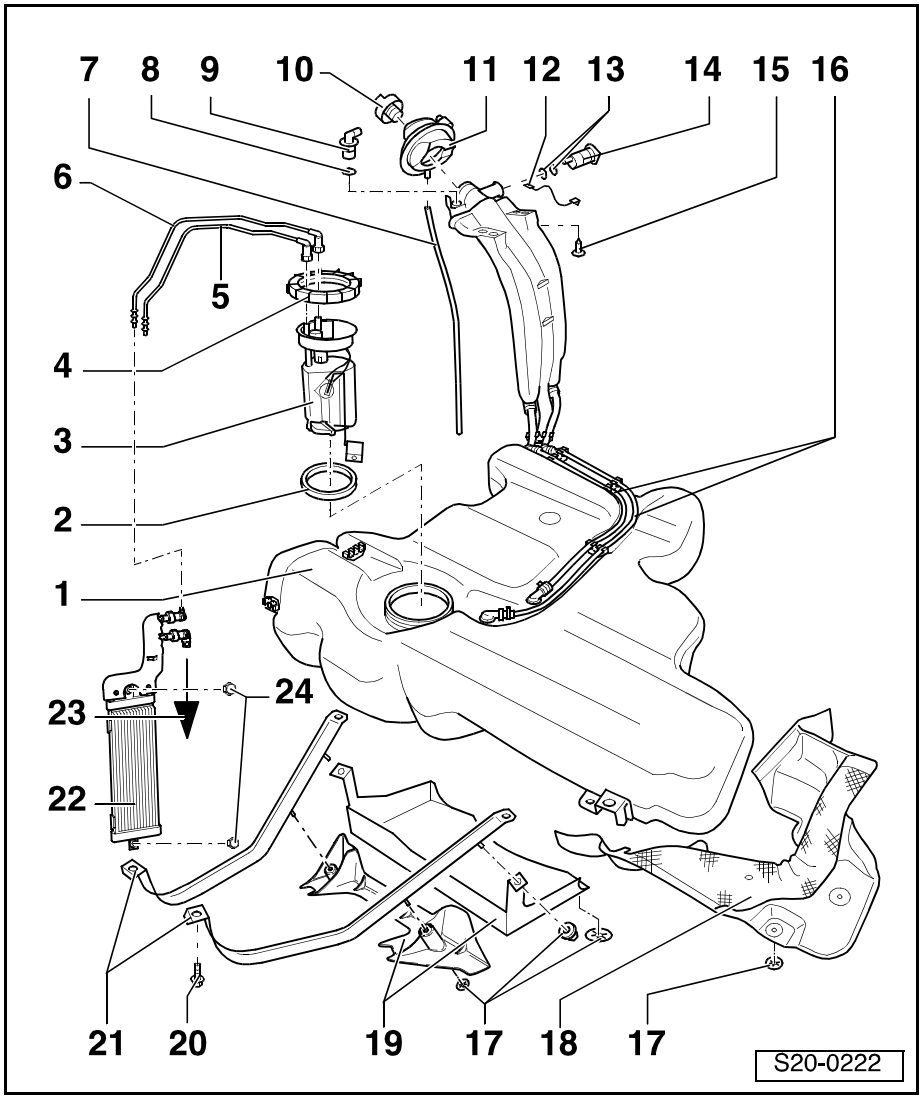

1 - Fuel tank
- ❑ when removing support, for example with the engine/ gearbox jack -V.A.G 1383 A-
- ❑ removing and installing ⇒ **20-1** page 4

2 - Gasket ring
- ❑ to be inserted dry into the opening of the fuel tank
- ❑ replace if damaged
- ❑ only moisten the seal of the flange with fuel for fitting purposes

3 - Fuel delivery unit
- ❑ with sender for fuel gauge display
- ❑ Removing and installing the fuel delivery unit ⇒ **20-1** page 8
- ❑ Fitting position ⇒ Fig. 1 in **20-1** page 3
- ❑ check ⇒ **20-1** page 6
- ❑ Clean strainer if dirty
- ❑ removing and installing fuel gauge sensor ⇒ **20-1** page 9

4 - Union nut, 80 Nm
- ❑ use wrench -MP 1-227- for removing and installing

5 - Feed line
- ❑ to fuel filter
- ❑ clipped in place on fuel tank
- ❑ check for firm seating
- ❑ black

6 - Return-flow line
- ❑ from fuel cooler
- ❑ clipped in place on fuel tank
- ❑ check for firm seating
- ❑ blue

7 - Overflow hose

8 - O-ring
- ❑ replace if damaged

9 - Gravity valve
- ❑ to remove, unclip valve and lift up and out of the filler neck
- ❑ inspect valve for blockage, valve in a vertical position: open, valve tilted 45°: closed

10 - Fuel filler cap

11 - Fuel tank lid unit
- ❑ with rubber bowl

12 - Earth connection

13 - O-ring
- ❑ replace if damaged

14 - Vent valve
- ❑ to remove, unclip valve at side and take out of filler neck.
- ❑ before installing, unscrew fuel filler cap ⇒ item 10
- ❑ check ⇒ Fig. 2 in **20-1** page 4

15 - 10 Nm

16 - Vent line
- ❑ black
- ❑ clipped in place on the side of the fuel tank
- ❑ check for firm seating
- ❑ secure with spring strap clamps

17 - Circlip
- ❑ removing: turn to the left
- ❑ Installing: tighten to 2 Nm

18 - Heat shield
- ❑ for fuel tank

19 - Cover
- ❑ for fuel tank
- ❑ not fitted to all vehicles

20 - 25 Nm

21 - Tensioning strap
- ❑ pay attention to different lengths

22 - Fuel cooler
- ❑ removing and installing ⇒ **20-1** page 6

23 - to fuel filter

24 - 20 Nm

Fig. 1: Fitting position of the fuel delivery unit ►

The marking on flange -1- must be aligned with the marking on the fuel tank -2-.

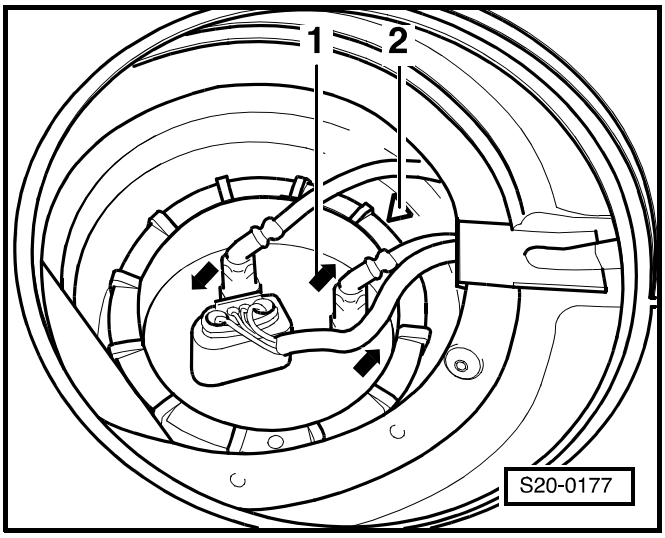

Note

After installing the fuel delivery unit, check whether the feed and return-flow lines are still clipped in place on the fuel tank.

Fig. 2: Inspect vent valve

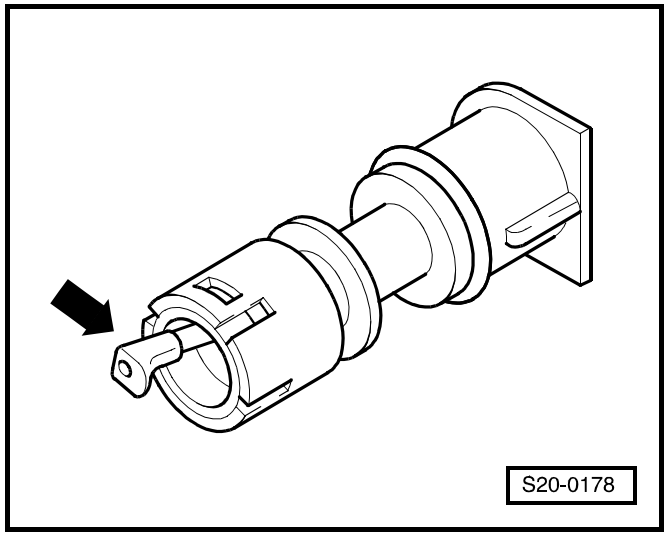

Lever in off position: closed

Lever pushed in -direction of arrow-: open

Note

Before installing the vent valve, unscrew fuel filler cap.

Removing and installing the fuel tank

Special tools, test and measuring equipment and auxiliary items required

- Engine/gearbox jack (e.g. -V.A.G 1383 A-)
- Torque wrench

Removing

Note

- *The fuel tank must not be more than 1/4 full.*
- *Observe the safety instructions before starting fitting work ⇒ **20-1** page 1.*

– Disconnect the battery-earth strap with the ignition off.

– Remove the rear right wheelhouse liner ⇒ Body Work; Rep. Gr. 66.

– Remove filler flap unit with rubber bowl ⇒ Body Work; Rep. Gr. 55.

– Unscrew the securing bolt on the fuel filler neck.

– Unscrew the straps. Support the fuel tank with engine/gearbox jack -V.A.G 1383 A- when removing.

– Lower engine/gearbox jack -V.A.G 1383 A- in such a way that the feed and return line and the connector on the delivery unit and on the fuel gauge sender can be pulled out.

– Unclip the feed and return line on the fuel tank.

– Lower the fuel tank.

Installing

Installation is carried out in the reverse order. Pay attention to the following:

- Lay the ventilation hoses avoiding any kinks.
- Lay the fuel hoses avoiding any kinks.
- Secure fuel hoses with spring collar clamps.
- Do not mix-up the feed and return line (the return line is blue, the feed line is black).
- Clip the feed and return line onto the fuel tank.

Removing and installing fuel filter

The fuel flow direction is indicated with arrows on the hoses, on the glow valve and the fuel filter.

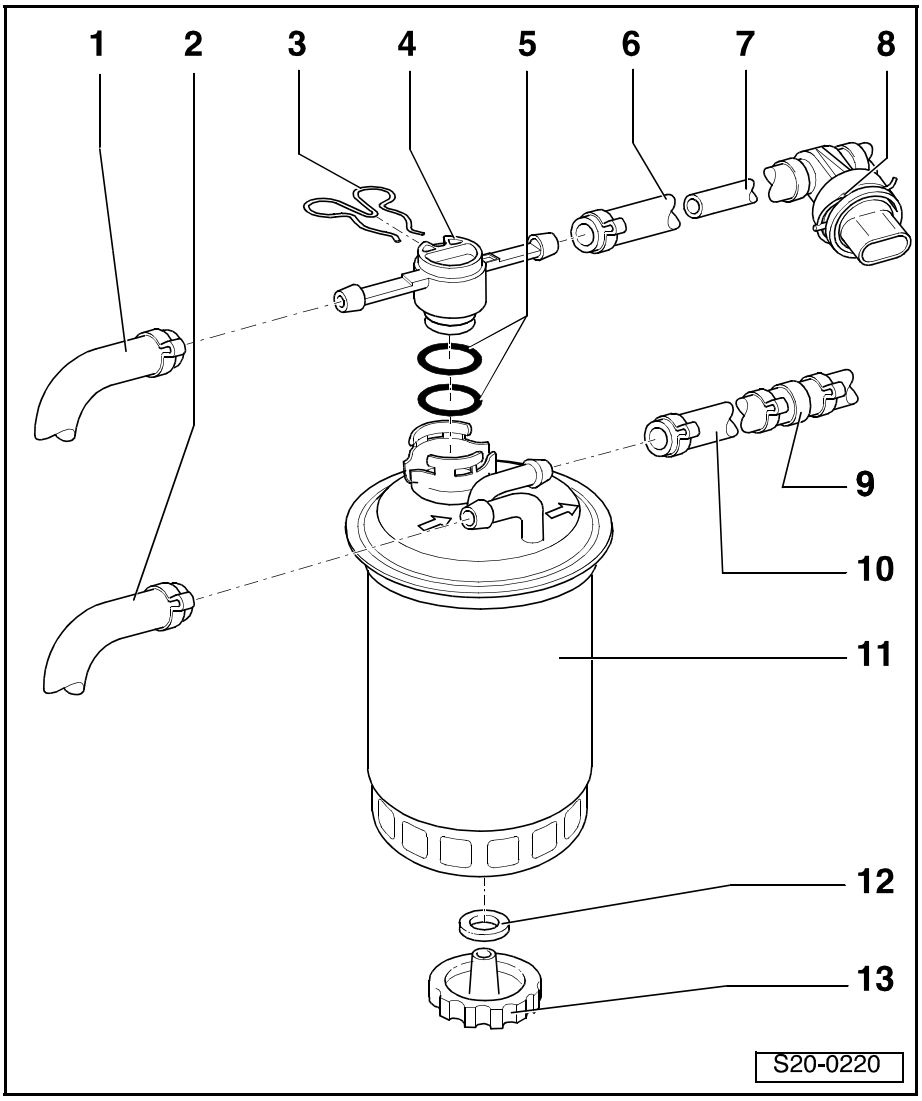

1 - Return-flow hose
- ❑ to fuel cooler
- ❑ blue marking

2 - Intake hose
- ❑ from fuel tank
- ❑ white marking

3 - Retaining clip
- ❑ replace if damaged

4 - Preheating valve
- ❑ Fitting position: Arrow points to fuel tank
- ❑ if the filter is replaced remove retaining clip and preheating valve with the fuel lines connected
- ❑ Temperature less than + 15°C: access to filter open
- ❑ Temperature above + 31°C: access to filter closed

5 - O-ring
- ❑ replace

6 - Return-flow hose
- ❑ from the tandem pump
- ❑ blue marking

7 - Fuel hose

8 - Fuel temperature sender -G81-

9 - Non-return valve
- ❑ only vehicles ➤ 03.02
- ❑ Fitting position: arrow points to tandem pump

10 - Intake hose
- ❑ to the tandem pump
- ❑ white marking

11 - Fuel filter
- ❑ fill with diesel fuel before fitting
- ❑ do not interchange connections
- ❑ replace if damaged

12 - Gasket
- ❑ replace if damaged

13 - Drain plug
- ❑ to ventilate remove the retaining clip of the preheating valve and remove preheating valve with the fuel lines connected
- ❑ release and drain approx. 0.1 litre fluid (catch)

Removing and installing fuel cooler

Special tools, test and measuring equipment and auxiliary items required

- Torque wrench

Removing

Observe rules for cleanliness ⇒ **20-1** page 1.

Note

The fuel cooler is located at the return-flow line to the fuel tank. It is attached to the underfloor of the vehicle body.

– Removing cover -A-.
– Separate fuel line at fuel cooler.
– Unscrew fixing nuts -arrows-.

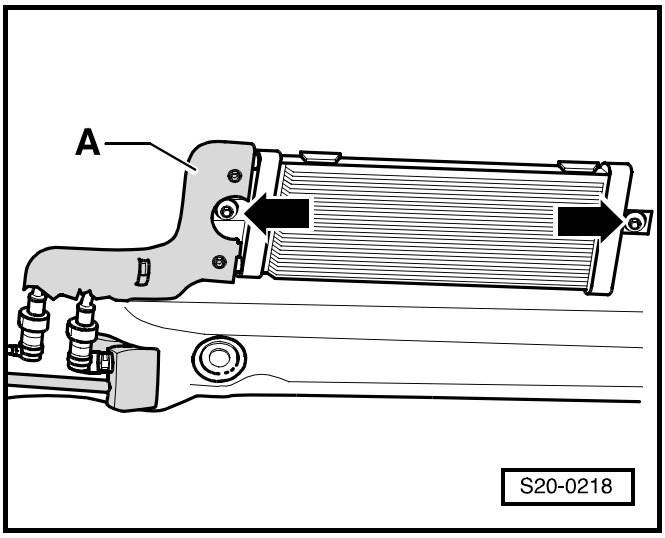

Installing

Installation is carried out in the reverse order. Pay attention to the following:

- Tighten nuts of the fuel cooler to 20 Nm.

Check the fuel delivery unit

Special tools, test and measuring equipment and auxiliary items required

- Remote control, e.g. -V.A.G 1348/3A-
- Pressure gauge appliance, e.g. -V.A.G 1318-
- Adapter, e.g. -V.A.G 1318/1-
- Adapter, e.g. -V.A.G 1318/11-
- Adapter, e.g. -V.A.G 1318/17-
- Adapter, e.g. -V.A.G 1318/23-
- Measuring vessel

Inspecting proper operation and power supply

Test conditions

- Battery voltage at least 11.5 V.
- Fuses o.k. (No. 28).
- All electrical components such as lights and rear window heater must be switched off.

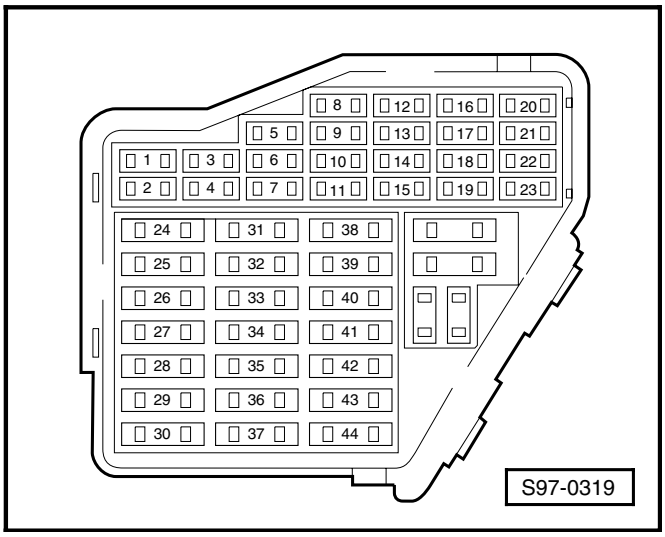

Test sequence

– Fold rear seat forwards.
– Remove the trim panel of the fuel delivery unit.
– Switch on ignition. The fuel delivery unit must be heard to start running.
– Switch off ignition.

If the fuel delivery unit does not run:

– Continuing searching for faults using a multimeter (e.g. -V.A.G 1715-) ⇒ Current Flow Diagrams, Electrical Fault Finding and Fitting Locations.

Inspecting fuel flow rate

Test conditions

- Supply voltage is o.k.
- Battery voltage at least 11.5 V.
- Fuel temperature 15...30 °C.
- Fuel tank at least $^1/_4$ full.

Test sequence

– Unscrew the fuel tank cap from the filler neck.

– Fold rear seat forwards.

– Remove the trim panel of the fuel delivery unit.

– Unplug 4-pin plug from fuel delivery unit.

– Connect remote control -V.A.G 1348/3A- with connection lines from measuring tool set to contact -1- of the fuel delivery unit and to battery +.

– Use connection lines from the measuring tool set to connect the contacts -4- to the plug and to the fuel delivery unit.

– Pull off the fuel feed line at the fuel filter and gather residual fuel in a cloth.

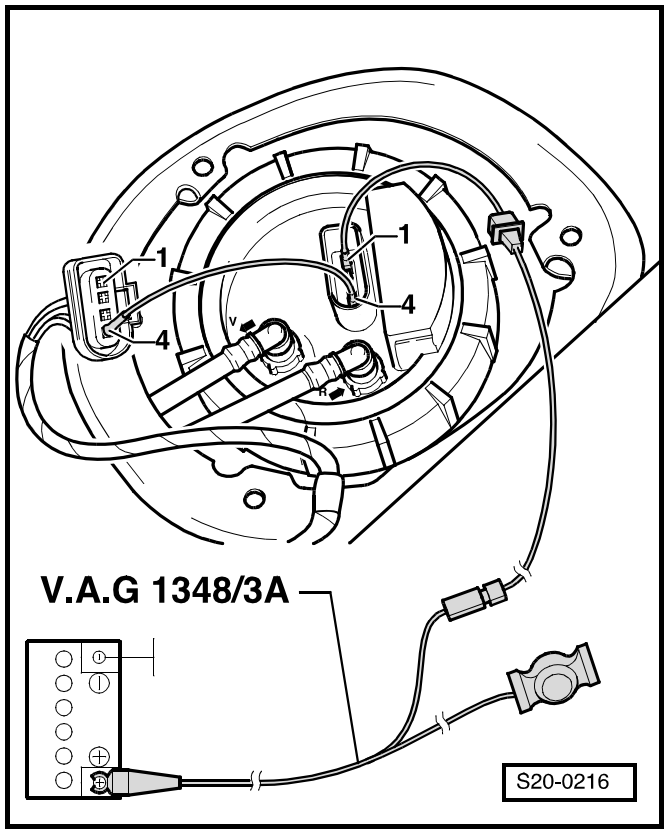

WARNING!

The fuel feed line is pressurized! Place a clean cleaning cloth around the connection point before detaching hose connections. Reduce pressure by carefully releasing the connection point.

– Connect pressure gauge -V.A.G 1318- with adapter -V.A.G 1318/23- and -V.A.G 1318/17- to the fuel feed line.

– Connect hose -V.A.G 1318/1- to adapter -V.A.G 1318/11- of the pressure gauge and hold in the measuring vessel.

– Open shut-off cock of the pressure measuring device. The lever points in the direction of flow -A-.

– Activate remote control -V.A.G 1348/3A-. Slowly close the shut-off cock until the manometer displays 3.5 MPa overpressure (0.35 bar). Now do not change the position of the shut-off cock.

– Empty measuring vessel.

– Activate remote control for 30 seconds.

Specified volume: 660 ml/30 seconds.

If the minimum flow rate is not reached:

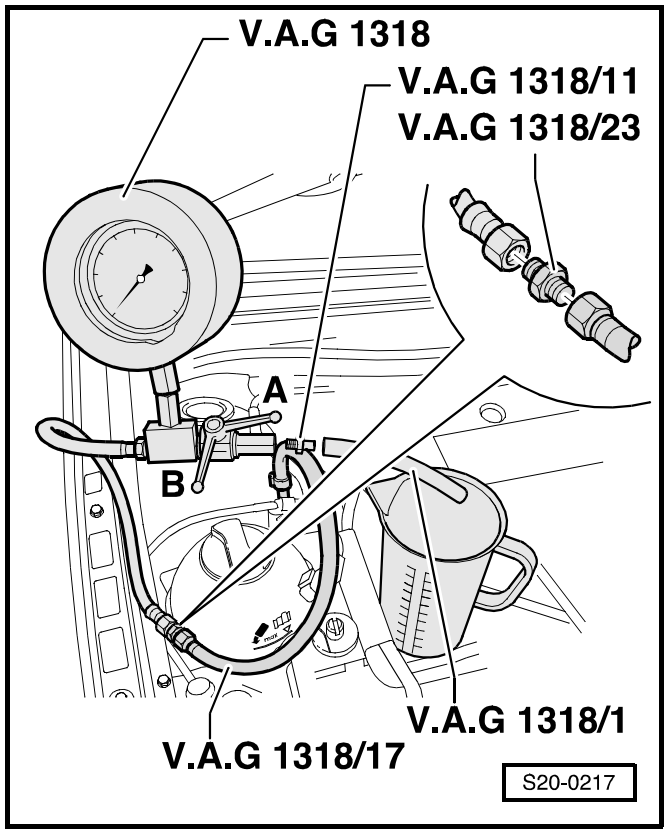

– Check the fuel lines for possible diameter restrictions (kinks) or blocking.
– Remove the fuel delivery unit and check whether the pump strainer is not clogged up.

If no fault was detected until now:

– Replace the fuel delivery unit.

Removing and installing the fuel delivery unit

Special tools, test and measuring equipment and auxiliary items required

- Wrench for the lock ring -T30101-
- Fuel extraction device (e.g. -VAS 5190-)
- Torque wrench

Condition

- The fuel tank must not be more than 3/4 full.

Removing

Note

- *Empty the fuel tank if necessary using the fuel extraction device -VAS 5190-.*
- *Observe all safety measures ⇒ Chapter 01-1 before beginning the assembly work.*
- *Observe the cleanliness regulations ⇒ Chapter 01-1.*

– Disconnect the battery-earth strap with the ignition off ⇒ Electrical System; Rep. Gr. 27.
– Fold rear seat forwards.
– Remove the trim panel of the fuel delivery unit.

WARNING!

The fuel system is under pressure! Place a clean cleaning cloth around the connection point before detaching hose connections. Reduce pressure by carefully removing the hose.

Note

Press together the bottom securing ring on the rear side of the angular connection in order to unlock the fuel lines.

– Pull out the connector as well as the fuel lines -1 and 2- from the flange of the fuel delivery unit. ►

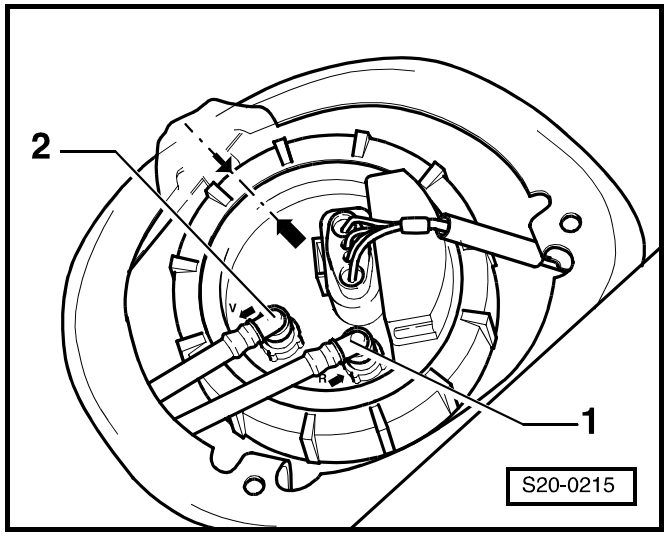

– Loosen union nut with wrench -MP 1-227-.
– Pull the fuel delivery unit and the gasket ring out of the opening of the fuel tank.

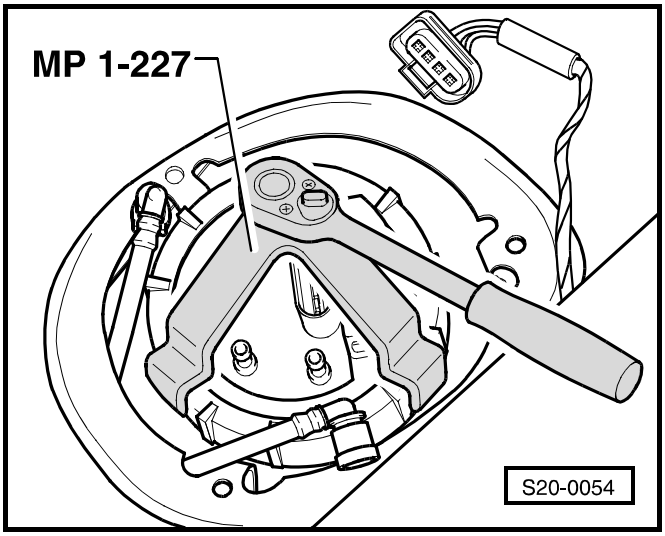

Note

You must empty the old delivery unit before disposing of it if you wish to replace it.

Installing

– The installation of the fuel delivery unit occurs in reverse order. Pay attention to the following:

Note

- *Do not bend the fuel gauge sender when installing it.*
- *Insert dry gasket ring into the opening of the fuel tank.*
- *The gasket must only be moistened from inside with fuel before assembly of the fuel delivery unit.*
- *Pay attention to installation position of flange of fuel delivery unit. Marking on the flange -arrow- must point against the direction of travel. The flange of the fuel delivery unit can only be installed in this position.*
- *Do not interchange the feed and return lines.*
- *Make sure the fuel lines fit tightly.*
- *After installing the fuel delivery unit, check whether the feed and return-flow lines are correctly clipped in place on the fuel tank.*

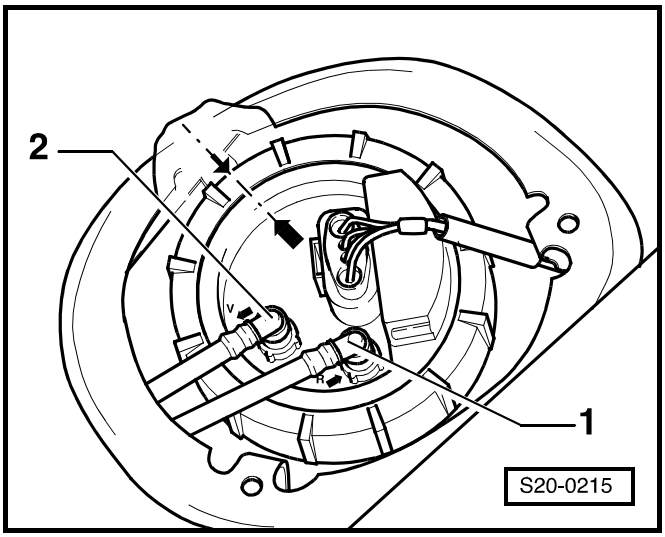

– Undertake the work operation „Procedure after interrupting the power supply“ ⇒ Vehicle Diagnosis, Measuring and Information System VAS 5051.

Removing and installing the fuel gauge sender

Removing

– Removing fuel delivery unit ⇒ **20-1** page 8.
– Unlatch and disconnect the line contact studs -3- and -4-.
– Raise catches -1- and -2- with a screwdriver and remove the fuel gauge sender towards the bottom -arrow-.

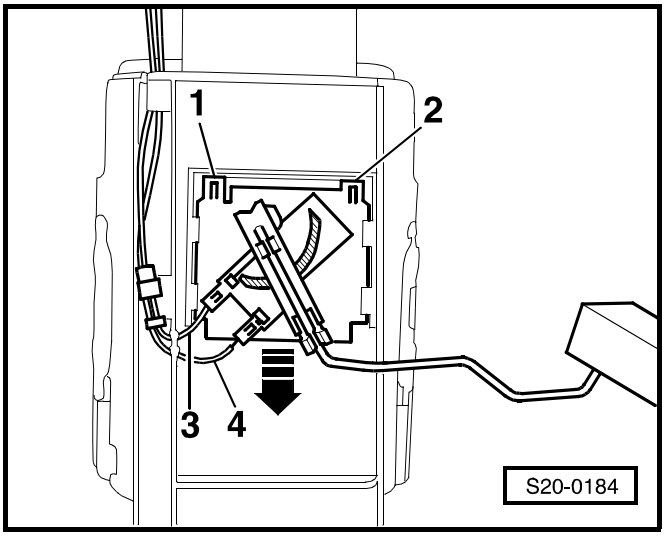

Installing

– Insert the fuel gauge sender in the fuel delivery unit guides and press upwards until the catches latch into position.
– Install the fuel delivery unit ⇒ **20-1** page 8.

Removing and installing the tandem pump

Special tools, test and measuring equipment and auxiliary items required

- Torque wrench
- Hand vacuum pump (e.g. -V.A.G 1390-)
- Ventilation reservoir (e.g. -V.A.G 1390/1-)
- Pliers for spring strap clips

Removing

– Separate feed hose -1- (marked in white) and return-flow hose -2- (marked in blue) from the fuel filter.

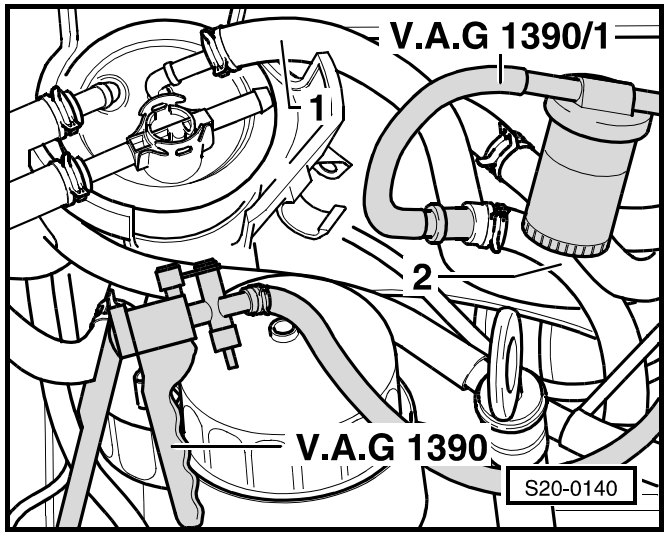

– Connect hand vacuum pump -V.A.G 1390- with ventilation reservoir -V.A.G 1390/1- to return-flow hose.

– Operate hand vacuum pump until no more fuel comes out of the return-flow hose. Ensure that no fuel is drawn into the hand vacuum pump.

– Unscrew the charge air pipe and put to one side.

– Separate vacuum line -1- for brake servo unit from tandem pump -4-.

– Separate central plug connection for unit injectors.

– Remove feed hose -2- (marked in white) at the tandem pump -4-.

– Unscrew securing bolts -arrows-.

– Remove tandem pump -4- from cylinder head.

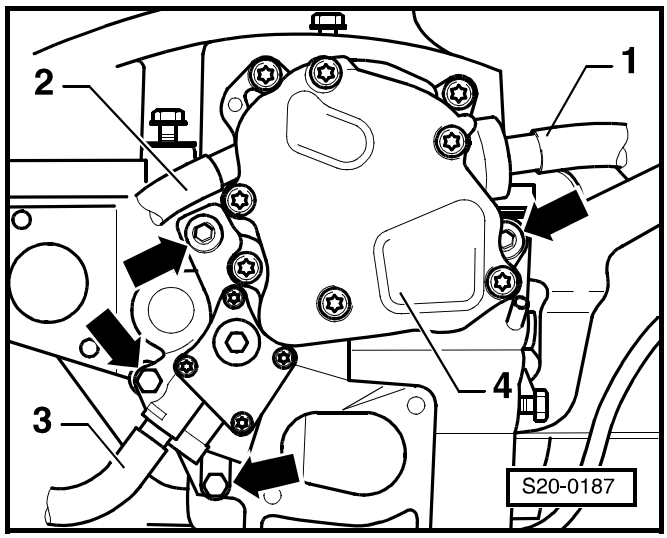

– Pull tandem pump -4- upwards, separate return-flow hose -3- (marked in blue) and remove tandem pump -4-.

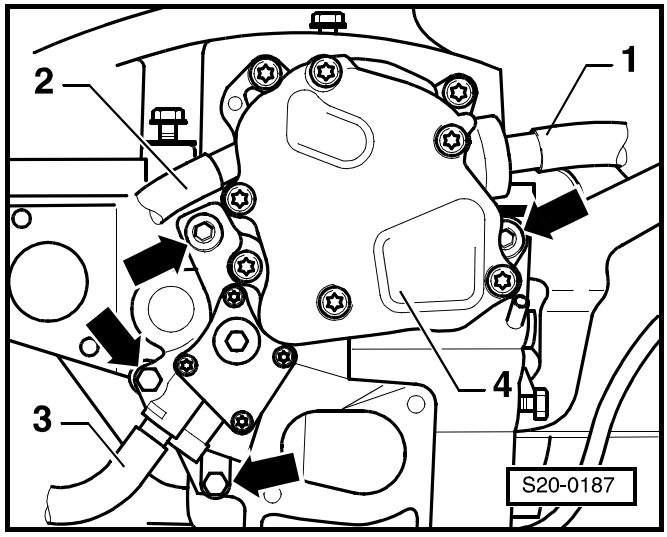

Installing

Installation is performed in the reverse order. Pay attention to the following points:

Note

- *Ensure the tandem pump coupling is correctly inserted into the camshaft.*
- *Always replace the tandem pump seals.*

– Connect return-flow hose -3- (marked in blue) to the return-flow coupling of the tandem pump.

– Install tandem pump and tighten the top fixing screws to 20 Nm.

– Tighten the bottom fixing screws to 10 Nm.

– Connect the feed hose -2- (marked in white) to the feed connection and the vacuum line -1- of the brake servo unit to the tandem pump -4-.

– Connect the central plug connection for the unit injector.

– Install the charge air pipe.
– Connect feed hose -1- (marked in white) to fuel filter. ►
– Connect the hand vacuum pump -V.A.G 1390- with the ventilation reservoir -V.A.G 1390/1- to the return flow hose -2- (blue marking) of the fuel filter.
– Operate hand vacuum pump until fuel flows out of the return-flow hose. Ensure that no fuel is drawn into the hand vacuum pump.
– Connect return-flow hose -2- (marked in blue) to fuel filter.
– Interrogate the fault memory ⇒ Vehicle Diagnosis, Measuring and Information System VAS 5051.

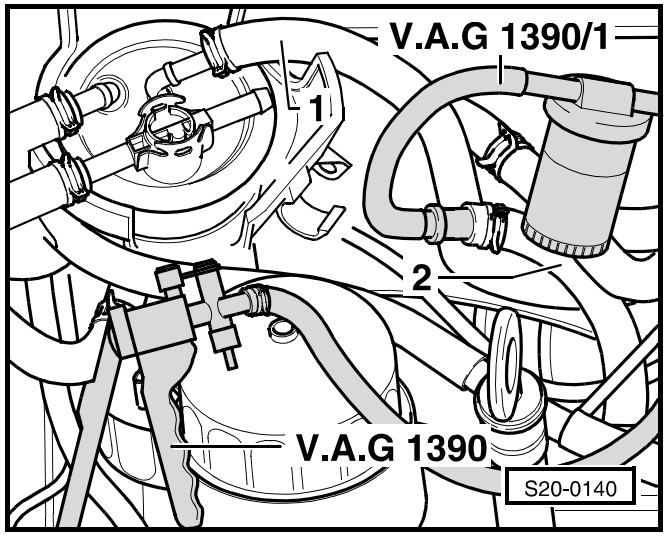

Note

Faults are stored as a result of separating the central plug connection for the unit injector. Interrogate the fault memory and delete it as required.

Inspecting a tandem pump

Special tools, test and measuring equipment and auxiliary items required

- Pressure gauge appliance (e.g. -VAS 5187-)
- Torque wrench
- Pliers for spring strap clips

Test conditions

- Coolant temperature must be at least 85 °C.
- Unit injectors O.K.
- Fuel filter and fuel line must not be blocked.
- The non-return valve in the fuel-intake hose must be O.K. (only vehicles ➤ 03.02).
- Fuel gauge sender must be in proper order.

Procedure

– Unscrew the charge air pipe and put to one side.
– Unscrew screw plug -arrow-. ►

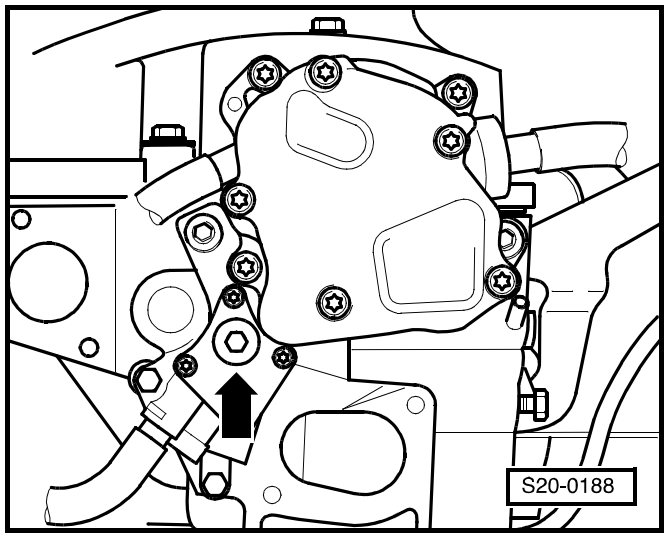

– Connect pressure gauge appliance -VAS 5187- as shown.
– Tighten up the charge air pipe.
– Engine speed must increase to 1500 rpm.
– Note the pressure shown on the manometer. Specified value: min. 0.35 MPa (3.5 bar).

If the specified value is not reached:

– Replace tandem pump ⇒ **20-1** page 10.

Note

After removing the pressure gauge appliance reinstall the plug and tighten to 25 Nm. Always replace the gasket ring.

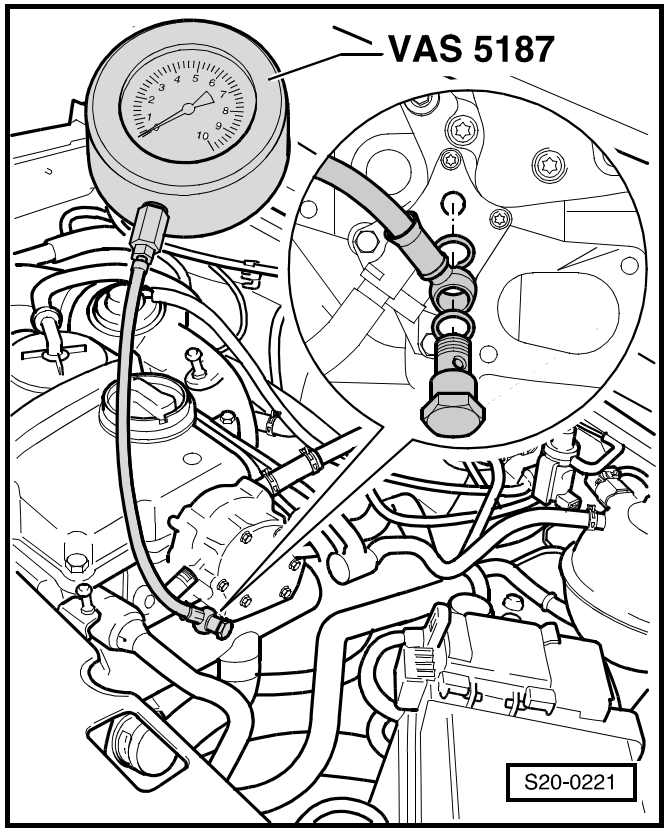

20-2 Servicing accelerator pedal

Removing and installing the accelerator control

1 - Bracket
- ❑ removing and installing
  ⇒ Chassis; Rep. Gr. 46

2 - Connector
- ❑ black, 6 pin

3 - 10 Nm

4 - Sender for accelerator pedal position -G79-
- ❑ Before removal, remove lower part of the dash panel insert on the driver's side
  ⇒ Body Work; Rep. Gr. 70.

5 - Bracket
- ❑ for footwell cover
- ❑ clipped in place at accelerator pedal position sender

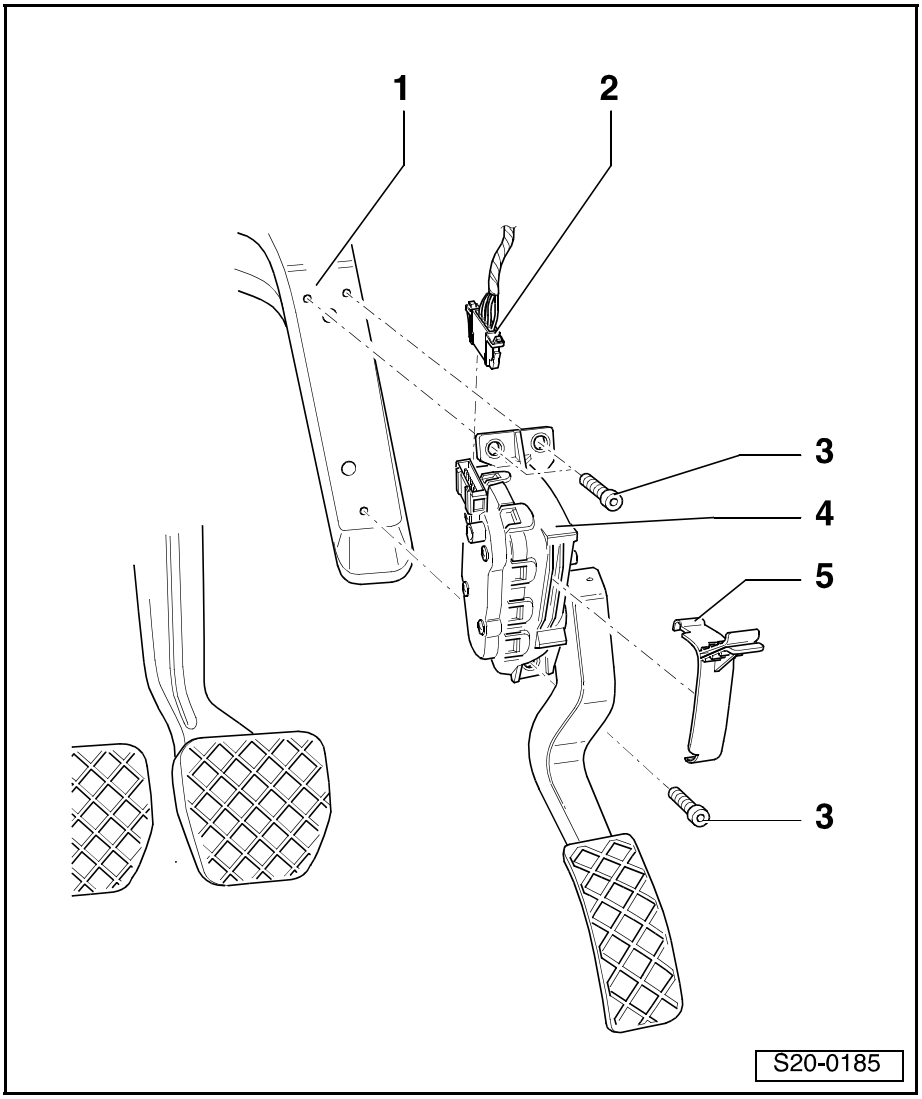

21 – Turbocharging

21-1 Charge air system with turbocharger I

Removing and installing exhaust turbocharger with component parts

Observe rules for cleanliness ⇒ **21-1** page 4.

Note

- *The hose connections are secured with clamps.*
- *The charge-air system must be tight.*
- *Always replace self-locking nuts.*

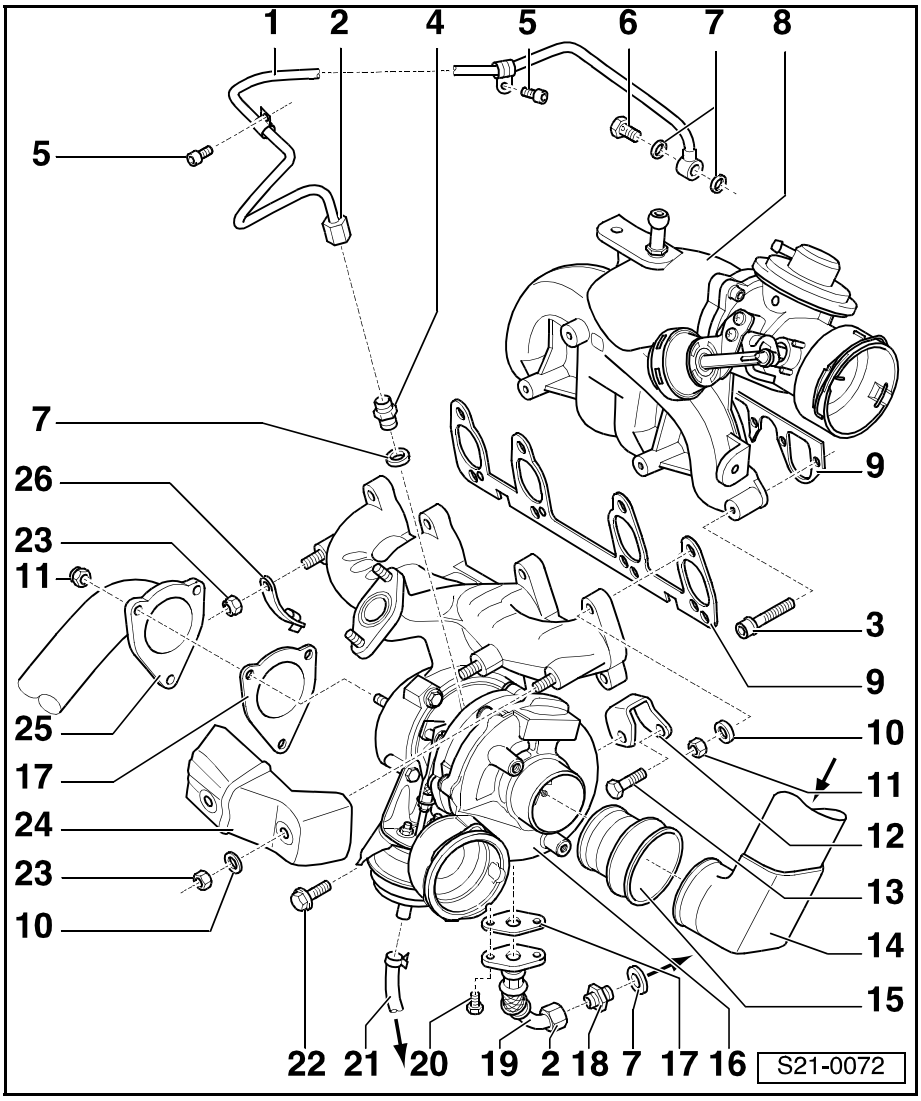

1 - Oil feed line
- ❑ before connecting fill the exhaust turbocharger on the connection fitting ⇒ item 4 with clean engine oil.

2 - Union nut, 22 Nm

3 - 22 Nm

4 - Connection fitting, 30 Nm
- ❑ replace
- ❑ Coat thread and ball sealing surface with -G 052 112 A3-

5 - 10 Nm

6 - Hollow screw, 25 Nm

7 - Gasket ring
- ❑ replace

8 - Intake manifold

9 - Gasket
- ❑ replace
- ❑ Check fitting position

10 - Washer

11 - 25 Nm
- ❑ replace
- ❑ Coat stud bolts with -G 052 112 A3-

12 - Support
- ❑ Exhaust turbocharger - cylinder block

13 - 40 Nm
- ❑ tighten all bolts first of all by hand

14 - Connecting tube
- ❑ Between turbocharger and air filter

15 - Intermediate flange

16 - Exhaust turbocharger
- ❑ Can only be replaced complete with exhaust manifold
- ❑ removing and installing ⇒ Chapter 21-2
- ❑ Inspecting charge pressure control ⇒ Chapter 21-2
- ❑ Charge pressure control valve and vacuum setting element for charge pressure control valve are parts of the turbocharger and cannot be replaced separately

- ❑ After installing the turbocharger, run engine at idling speed for about 1 minute to ensure that oil is supplied to the turbocharger

17 - Gasket
- ❑ replace

18 - Connection fitting, 40 Nm

19 - Oil return line
- ❑ to cylinder block

20 - 17 Nm

21 - Vacuum line
- ❑ To the solenoid valve for charge pressure limitation -N75-
- ❑ Connection diagram for vacuum hoses ⇒ **21-1** page 5

22 - 20 Nm
- ❑ tighten all bolts first of all by hand

23 - 20 Nm
- ❑ replace

24 - Shield

25 - Front exhaust pipe

26 - Bracket
- ❑ for oil feed line ⇒ item 1
- ❑ Before installing attach the oil feed line

Removing and installing parts of the charge air cooling

Note

- *The hose connections are secured with clamps.*
- *The charge-air system must be tight.*
- *Remove oil and grease from the charge pressure hoses and charge pressure pipes and from their connections before installing.*

1 - 5 Nm
2 - O-ring
❑ replace if damaged
3 - Top charge-air pipe
4 - Charge air connection hose
❑ to connection fitting
5 - Rubber bowl
6 - Charge air connection hose
❑ from turbocharger
7 - 10 Nm
8 - Bottom charge air pipe
9 - Charge air connection hose
10 - Bracket
11 - Air deflector
12 - Charge air cooler
13 - Intake manifold pressure sender -G71- with intake manifold temperature sender -G72-

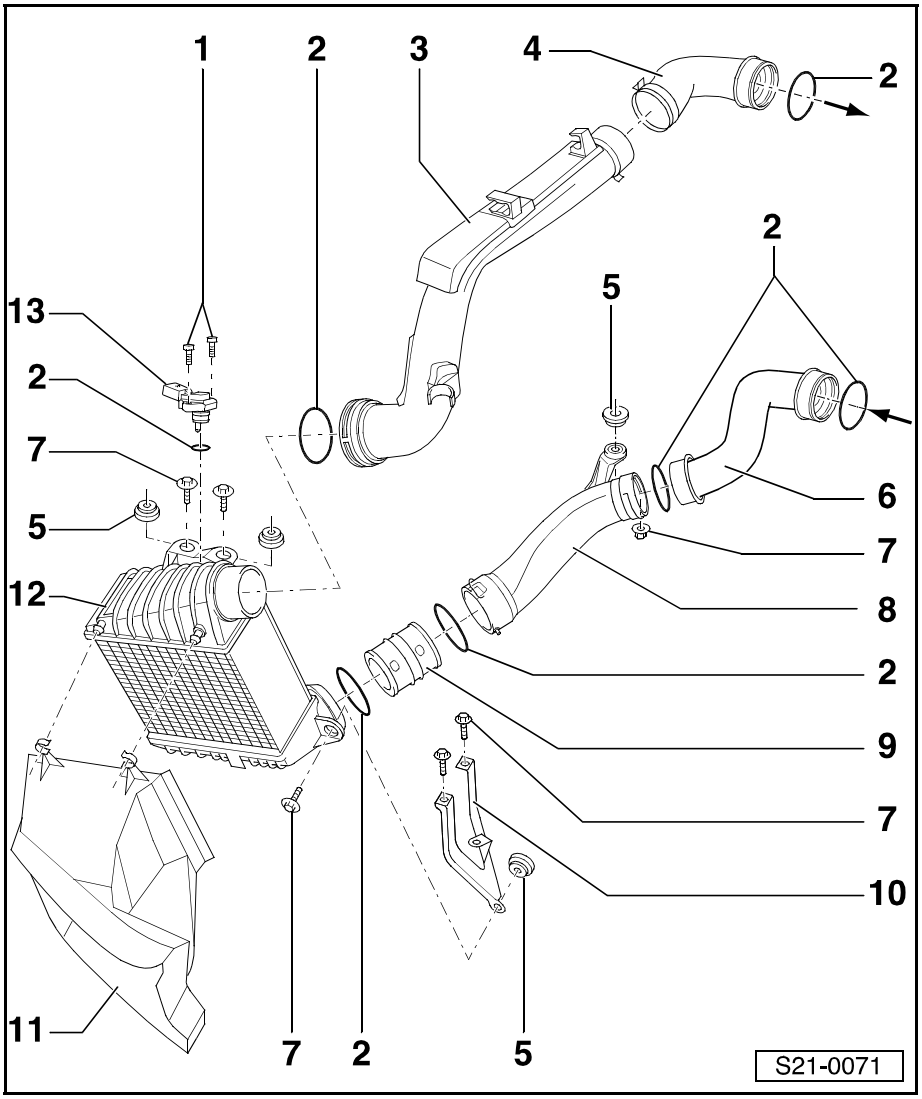

Removing and installing charge-air cooler

Special tools, test and measuring equipment and auxiliary items required

- Torque wrench
- Pliers for spring strap clips

Removing

– Remove the right sound dampening system ⇒ Body Work; Rep. Gr. 50.

– Disconnect plug from intake manifold temperature sender -G72-.
– Separate top charge air connection pipe ⇒ item 3 in **21-1** page 3.
– Separate bottom charge air connection pipe ⇒ item 8 in **21-1** page 3.
– Unscrew bolts attaching ⇒ item 7 in **21-1** page 3 charge air cooler and take out cooler.

Installing

Installation is carried out in the reverse order.

Rules of cleanliness

Carefully observe the following »5 rules« for cleanliness when working on the exhaust turbocharger:

- Thoroughly clean the connection points and their surroundings before releasing.
- Place removed parts on a clean surface and cover. Do not use fuzzy cloths!
- Carefully cover or close opened components if the repair is not completed immediately.
- Only install clean parts. Do not remove new parts from their wrapping until just before installing.
- When the system is open: Do not work with compressed air, do not move the vehicle.

Connection diagram for vacuum hoses

1 - Vacuum setting element
- ❑ For intake manifold flap

2 - Changeover valve for intake manifold flap -N239-

3 - Distributor part

4 - Vacuum reservoir

5 - To air filter

6 - Solenoid valve for charge pressure control -N75-
- ❑ Inspecting charge pressure control ⇒ Chapter 21-2

7 - Vacuum setting element
- ❑ Boost-pressure control
- ❑ Component part of the exhaust turbocharger cannot be replaced separately

8 - Exhaust gas recirculation valve -N18-

9 - Mechanical exhaust gas recirculation valve

10 - Tandem pump

11 - Brake servo unit

12 - Distributor part
- ❑ With non-return valve for brake servo unit

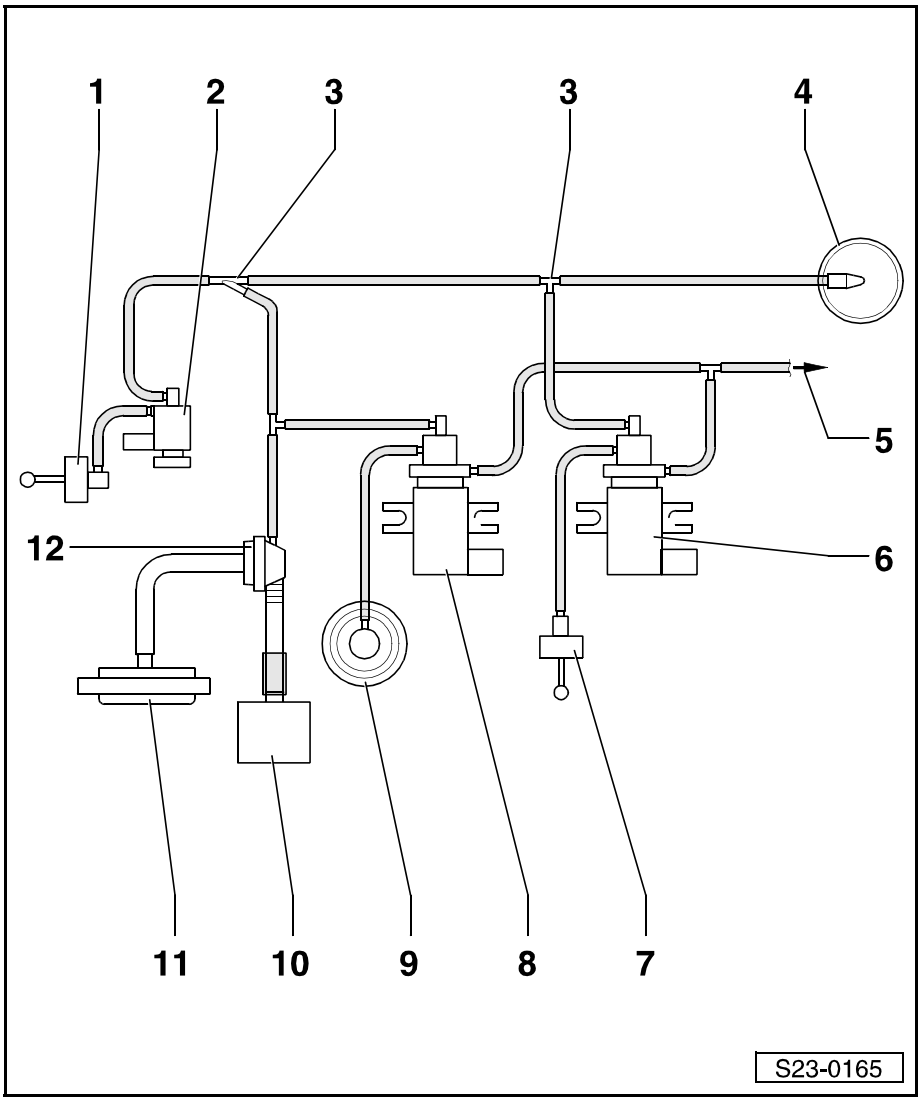

21-2 Charge air system with turbocharger II

Remove exhaust turbocharger

Special tools, test and measuring equipment and auxiliary items required

- Torque wrench
- Pliers for spring strap clips

Removing

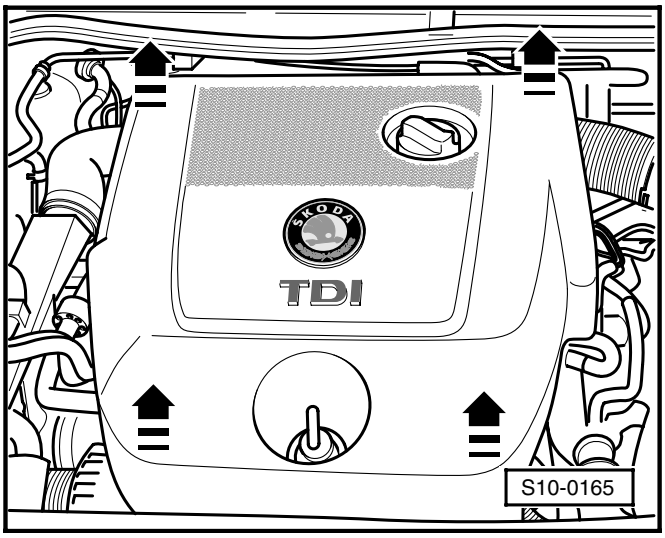

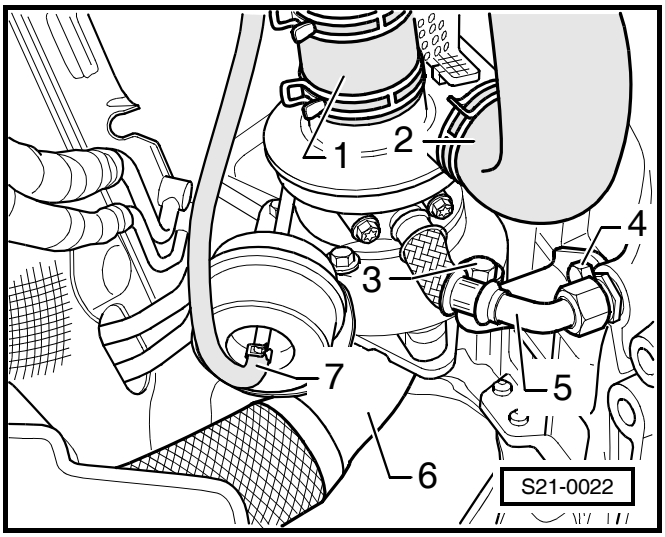

- Remove engine cover -arrows-.
- Remove top connection pipe and charge air connection hose ⇒ Chapter 21-1.
- Remove the intake manifold ⇒ Chapter 21-1.
- Remove the noise insulation.
- Remove connecting hoses -1- and -2-.
- Remove oil return-flow line -5-.
- Unscrew bolts -3- and -4- from support and take out support.
- Remove the vacuum hose -7- from the vacuum unit for charge pressure control.
- Remove front exhaust pipe -6- from turbocharger and place down to the side ⇒ Chapter 26-1.
- Remove connection pipes for inlet connection - exhaust manifold for exhaust gas recirculation ⇒ Chapter 26-2.
- Remove the oil feed line for the exhaust turbocharger ⇒ Chapter 21-1.
- Unbolt exhaust manifold from cylinder head.
- Lift turbocharger up and out.

Installing

Installation occurs in reverse order. Pay attention to the following:

Note

- *Tightening torques ⇒ Chapter 21-1.*
- *After installing the exhaust turbocharger, run engine at idling speed for about 1 minute to ensure that oil is supplied to the exhaust turbocharger.*

Checking charge pressure control

Special tools, test and measuring equipment and auxiliary items required

- Hand vacuum pump (e.g. -V.A.G 1390-)
- Hand multimeter (e.g. -V.A.G 1715-)

- Vehicle system tester -V.A.G 1552-
- Diagnostic cable -V.A.G 1551/3, 3A, 3B, 3C-
- Adapter cable set (e.g. -V.A.G 1594 C-)
- Test box -V.A.G 1598/31-

Test conditions

- No fault in the fault memory ⇒ 1.9-ltr./96 kW (TDI) Engine, Fuel Injection and Glow Plug System; Rep. Gr. 01
- No leaks on the intake and exhaust side
- No fault on the engine/fuel injection system
- Engine oil temperature at least 80°C

Test sequence

If test and measuring devices are required during test drives observe the following:

- Always secure the test and measuring devices on the rear seat and have a second person operate them there.

  If the test and measuring equipment is operated from the front passenger seat, this can result in injuries to the persons sitting on that seat in the event of an accident which involves the front passenger airbag being deployed.

– The charge pressure is measured with vehicle system tester - V.A.G 1552- when the engine is idling and during a road test.

– Connect up the Vehicle system tester -V.A.G 1552- and select the address word 01 „Engine electronics“ (the engine must be idling at the time) ⇒ 1.9 ltr./96 kW (TDI) Engine, Fuel Injection and Glow Plug System; Rep. Gr. 01.

– Select function 0 4 for „Basic setting“ and display group 0 1 1.

Readout on display:

```
Basic setting 11                    ->
1400 rpm     OFF      982 mbar      99 %
```

Note

After selecting display group 011, the idling speed is increased by the engine control unit in display block 1 to 1380…1420 rpm.

The display in display field 2 must switch between „off“ and „on“ every 10 seconds.

The following readouts must fluctuate in display fields 3 and 4:

Display field 2: off.

- Specification in display field 3: Atmospheric pressure in mbar
- Specification in display field 4: 98…100 %

Display field 2: on.

- Specification in display field 3: Atmospheric pressure in mbar +100…250 mbar
- Specification in display field 4: 0…2 %

Continue the test as follows:

(→) Press.

– Select function 0 8 for „Read measured value block“ and display group 0 1 1.
– Accelerate vehicle in 2nd gear from about 1000 rpm to 3200 rpm. While doing so the accelerator pedal must be fully pressed down.
– At about 3000 rpm read off the value indicated in display block. ►

```
Reading measured value block 11
->
```

Specification in display field 3: 2100…2600 mbar

If the specified value is not reached:

– Conduct an actuator diagnosis for the charge pressure control solenoid valve -N75- ⇒ 1.9 ltr./96 kW (TDI) Engine, Fuel Injection and Glow Plug System; Rep. Gr. 01.

Charge pressure control solenoid valve must operate for this test. While doing so the linkage of the charge pressure control vacuum unit at the bottom of the turbocharger must move back and forward. This linkage must move at least 3…4 times as long as a vacuum is present in the vacuum system.

If the linkage moves and the nominal charge pressure is not reached:

– Replace turbocharger.

If the linkage does not move because the charge pressure control solenoid valve is not operating:

– Test charge pressure control solenoid valve -N75- ⇒ 1.9 ltr./96 kW (TDI) Engine, Fuel Injection and Glow Plug System; Rep. Gr. 23.
– Inspect vacuum hoses ⇒ Chapter 21-1.

If the linkage does not move although the charge pressure control solenoid valve is operating:

– Connect hand vacuum pump to charge pressure control valve and inspect linkage for unobstructed movement. ►

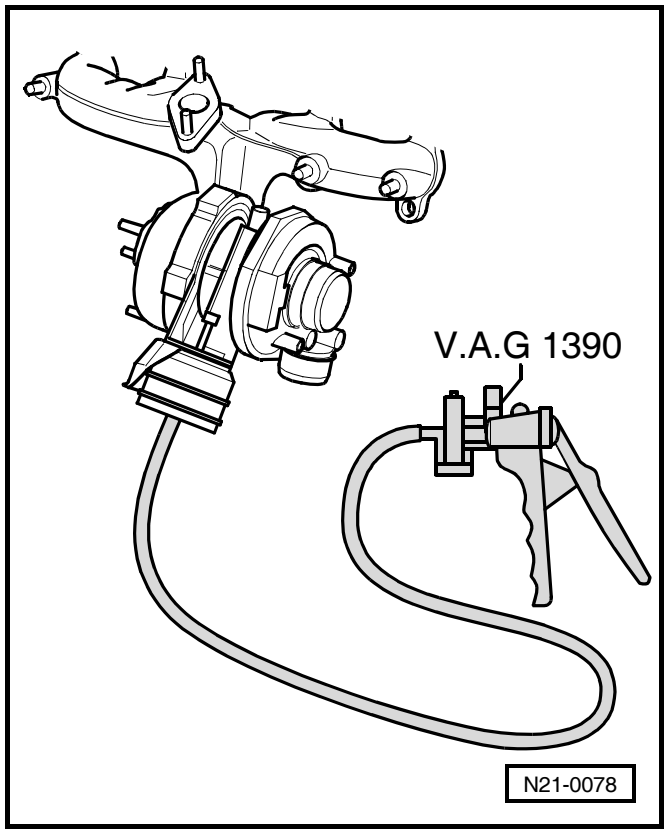

If the linkage only moves with difficulty or does not move at all:

– Replace turbocharger.

26 – Exhaust System

26-1 Removing and installing parts of the exhaust system

Note

- *Always replace gaskets and self-locking nuts.*
- *The decoupling element in the front part of the exhaust pipe should not be bent by more than 10 - danger of damaging it.*
- *After performing installation work on the exhaust system, make sure the exhaust system is not mounted under tension and has adequate clearance from the vehicle body. If necessary slacken the clamping sleeve (s) and collar clamp and align the silencer and exhaust pipe so as to create adequate clearance between these components and the vehicle body, and that the weight of the exhaust system is evenly distributed over the hangers.*

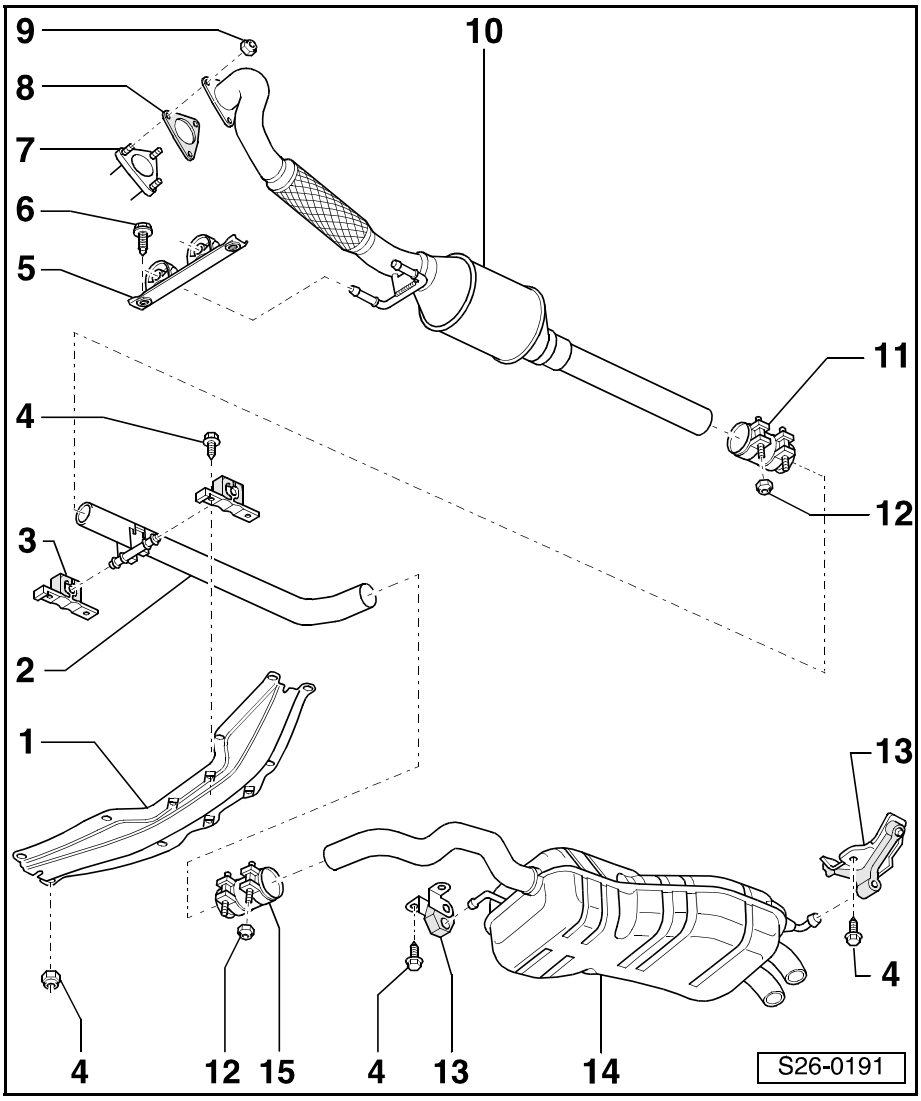

1 - Tunnel bridge
- ❑ with hole for aligning exhaust system ⇒ **26-1** page 3

2 - Connecting tube
- ❑ if factory-fitted the connecting tube and the rear silencer form a building unit, when carrying out repairs both components are replaced individually
- ❑ Separation point ⇒ **26-1** page 3
- ❑ when installing align free of stress ⇒ **26-1** page 3

3 - Hanger
- ❑ Fitting position ⇒ Fig. 1 in **26-1** page 2

4 - 25 Nm

5 - Hanger

6 - 25 Nm
- ❑ replace

7 - Exhaust turbocharger
- ❑ with exhaust manifold
- ❑ removing and installing ⇒ Chapter 21-2

8 - Gasket
- ❑ replace

9 - 25 Nm
- ❑ replace
- ❑ Coat stud bolts of exhaust turbocharger with hot bolt paste -G 052 112 A3- before installing.

10 - Front exhaust pipe
- ❑ with oxidation catalytic converter
- ❑ protect against shocks and blows
- ❑ with decoupling element
- ❑ do not twist decoupling element more than 10° - risk of damage
- ❑ removing and installing ⇒ **26-1** page 2
- ❑ Align exhaust system free of stress ⇒ **26-1** page 3

11 - Clamping sleeve - front
- ❑ Align exhaust system free of stress before tightening ⇒ **26-1** page 3
- ❑ Fitting position: horizontal in vehicle, bolted connection points to the left
- ❑ Tighten bolted connections evenly

12 - 40 Nm

13 - Retaining strap

14 - Rear silencer
- ❑ if factory-fitted the rear silencer and the connecting tube form a building unit, when carrying out repairs both components are replaced individually
- ❑ Separation point ⇒ **26-1** page 3
- ❑ when installing align free of stress ⇒ **26-1** page 3

15 - Clamping sleeve - rear
- ❑ for individual replacement of the rear silencer or connecting tube
- ❑ Align exhaust system free of stress before tightening ⇒ **26-1** page 3
- ❑ Fitting position: horizontal in vehicle, bolted connection points to the front
- ❑ Tighten bolted connections evenly

Fig. 1: Installed position of the hanger

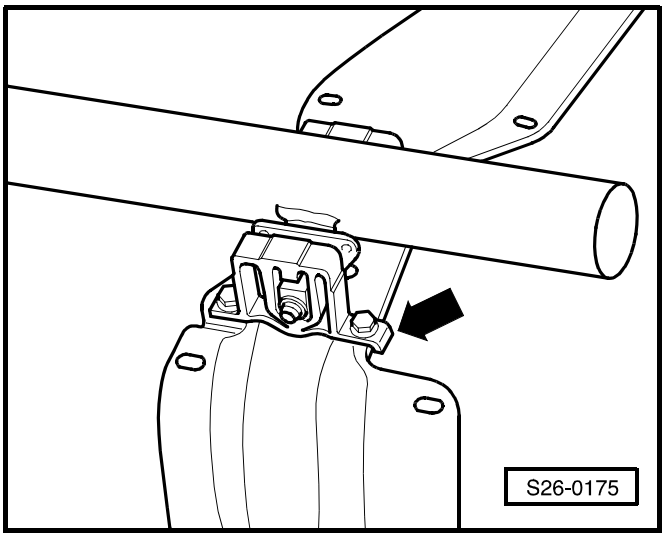

The angled side -arrow- at the base of the hanger points in direction of travel.

Removing and installing front exhaust pipe with catalytic converter

Special tools, test and measuring equipment and auxiliary items required

- Torque wrench
- Hot screw paste -G 052 112 A3-

Removing

Note

- *Avoid large deflections at twist decoupling element, max. deflection 10 .*
- *Always replace self-locking nuts.*

– Remove the sound dampening system in the middle ⇒ Body Work; Rep. Gr. 50.

– Unscrew hanger from assembly carrier -arrows-.

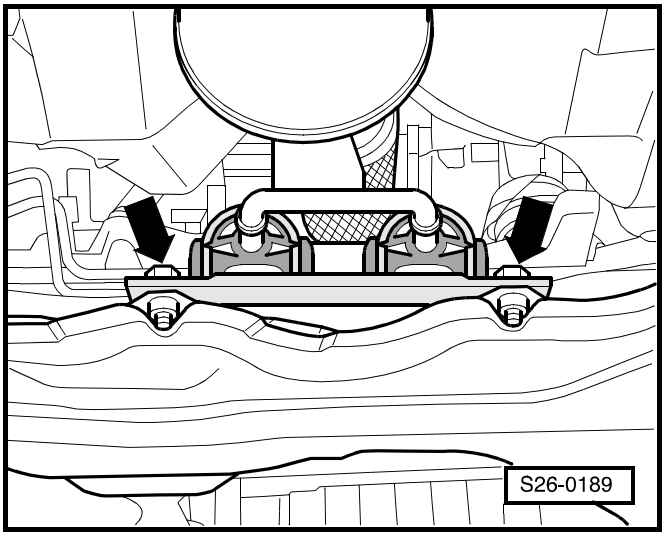

– Unscrew nuts at flange of exhaust turbocharger -arrows-.
– Slacken bolted connections on front clamping sleeve and push clamping sleeve to the rear.
– Remove front exhaust pipe.

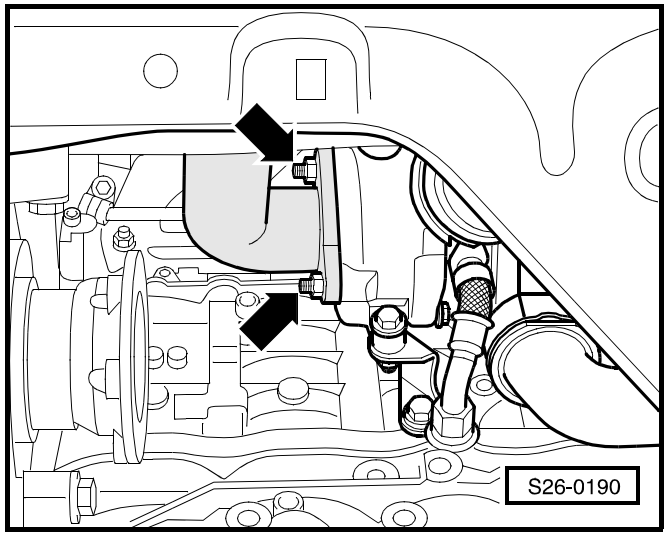

Installing

Installation is performed in the reverse order. Pay attention to the following points:

– Coat stud bolts of exhaust turbocharger with hot bolt paste -G 052 112 A3- before installing.
– Align exhaust system free of stress ⇒ **26-1** page 3.

Replace connecting tube and rear silencer

Special tools, test and measuring equipment and auxiliary items required

- Torque wrench
- Body saw (e.g. -V.A.G 1523-)

A separation point is provided for repair purposes for replacing the connecting tube or rear silencer.

– Use body saw (e. g. -V.A.G 1523-) to separate exhaust pipe at right angles at separation point -arrow 2-.
– When installing, position clamping sleeve -4- at the side markings -arrow 1- and -arrow 3-.

Installation position of clamping sleeve: horizontal in vehicle, screws point to the front

– Align exhaust system free of stress ⇒ **26-1** page 3.

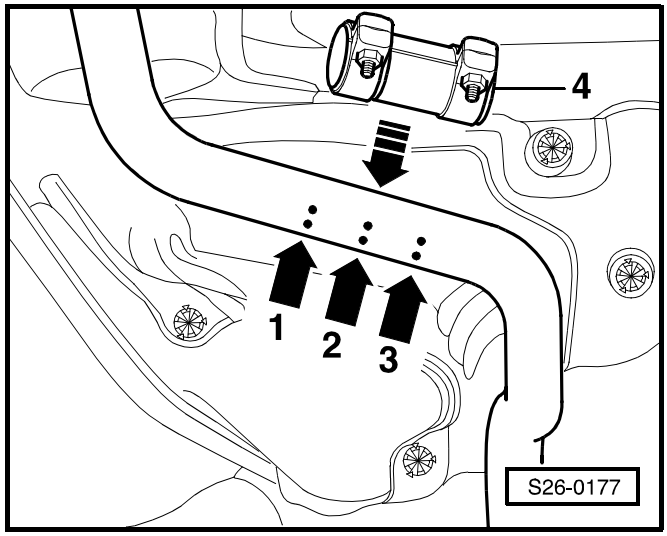

Aligning exhaust system free of stress

Special tools, test and measuring equipment and auxiliary items required

- Torque wrench

Procedure

- The exhaust system is aligned when cold.

– Shop-make screw in accordance with stated dimensions from an M10 or M14 bolt for aligning the exhaust system.

Size of bolt	I - M14	II - M10
Dimension -x-	6 mm	4 mm
Dimension -y-	25 mm	25 mm
Dimension -z-	10 mm	---

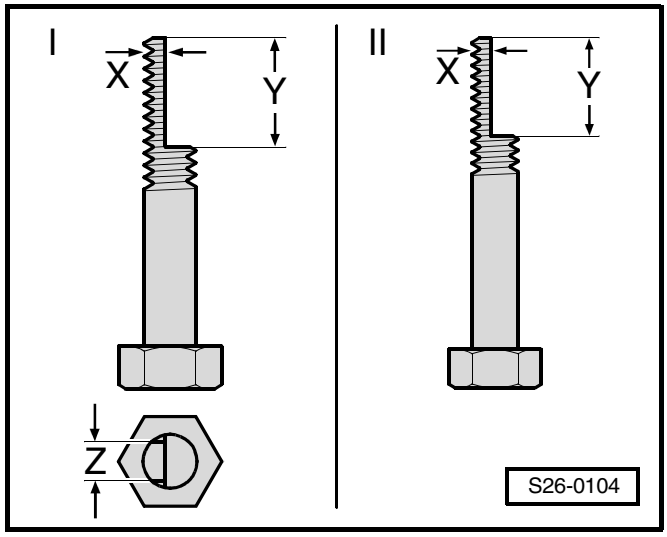

Note

*The use of the screw (M10 or M14) depends on the diameter of the rear hole in the tunnel bridge ⇒ **26-1** page 4, illus. S26-0180.*

♦ A second mechanic is required for aligning the exhaust system.

– Slacken bolted connections at front clamping sleeve (between catalytic converter and connecting tube).

– Insert shop-made screw through rear hole -arrow- of tunnel bridge, the flat point points toward the hanger pin of the exhaust system.

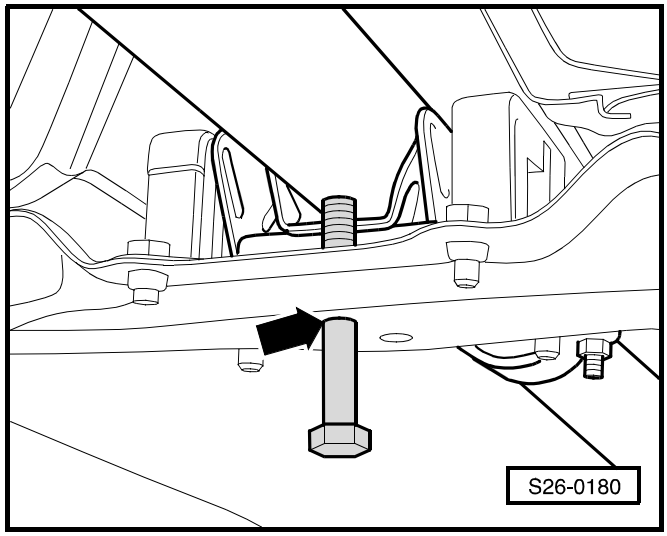

Note

The exhaust system is pretensioned in the direction of travel when the shop-make screw is inserted.

– Align the connecting tube and rear silencer horizontally.

The hanger pin at the exhaust system must be parallel to the tunnel bridge (dimension -X- on left and right identical).

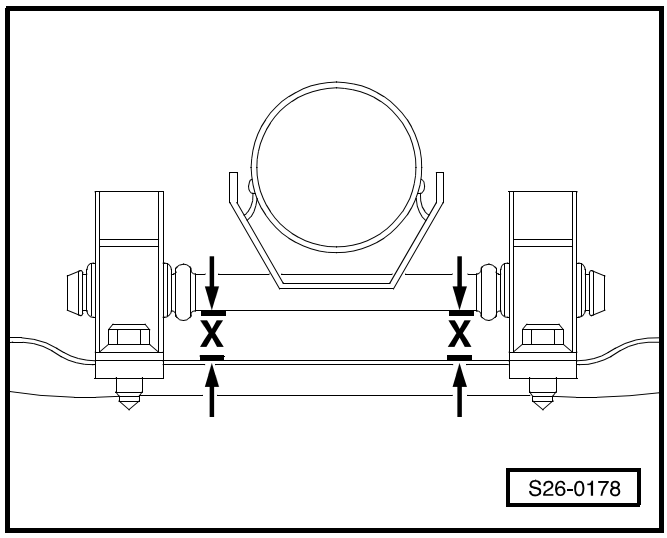

Note

On vehicles with fitted repair-rear clamping sleeve inspect additionally the horizontal position of the rear silencer at its tail pipes.

– Fit the front clamping sleeve with a distance of approx. 5 mm from the marking „A“ -arrow 1- in the horizontal position and tighten screws uniformly to 40 Nm.

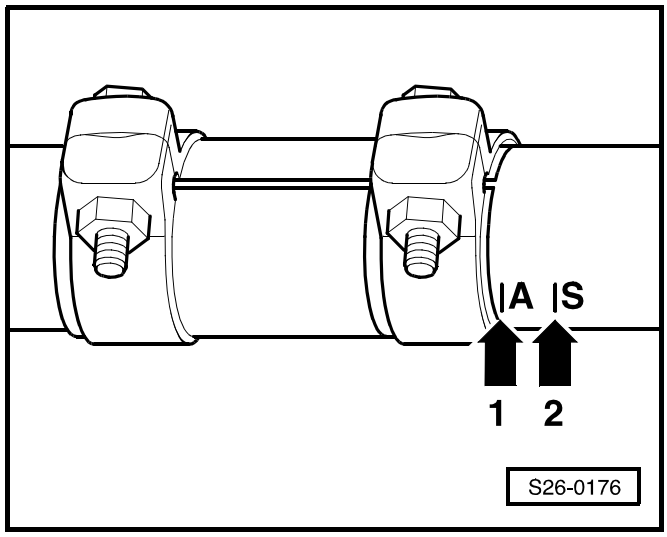

Note

Marking „S“ does not apply for this engine.

Checking the exhaust system for leaks

– Start engine and run in idle.

– Seal off tail pipes for the duration of the leak check (e.g. with cloth or plugs).

– Check the connection points for leaks by listening: Cylinderhead/exhaust manifold, exhaust manifold/exhaust pipe with catalytic converter, etc.

– Eliminate any leak found.

26-2 Exhaust gas recirculation system

Note

- *The exhaust gas recirculation system is operated by the diesel direct injection system control unit -J248- via the EGR valve -N18- to the mechanical exhaust gas recirculation valve.*
- *Test exhaust gas recirculation and EGR valve -N18- ⇒ 1.9 ltr./96 kW (TDI) Engine, Fuel Injection and Glow Plug System; Rep. Gr. 01.*
- *The mechanical exhaust gas recirculation valve with cone-shaped valve plunger makes it possible to achieve different opening cross-sections at different valve strokes.*
- *Connection diagram for vacuum hoses ⇒ Chap. 21-1.*

1 - Intake manifold

2 - O-ring
- ❑ replace

3 - Vacuum setting element

4 - 5 Nm

5 - Mechanical exhaust gas recirculation valve
- ❑ part of inlet connection
- ❑ always replace complete with inlet connection
- ❑ check ⇒ **26-2** page 2

6 - Inlet connection
- ❑ with mechanical exhaust gas recirculation valve and intake manifold flap

7 - 10 Nm

8 - Gasket
- ❑ replace

9 - 25 Nm

10 - Connecting tube

11 - Gasket
- ❑ replace

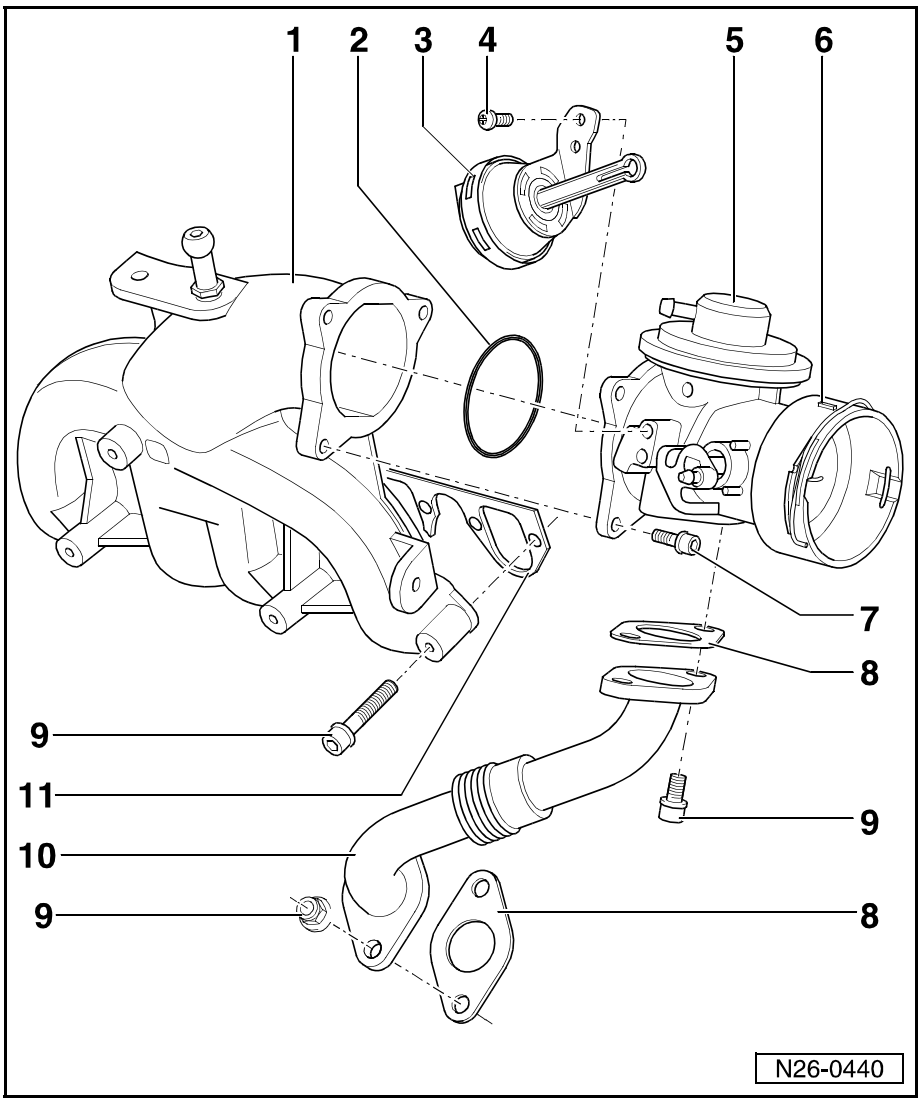

Testing mechanical exhaust gas recirculation valve

Special tools, test and measuring equipment and auxiliary items required

- Hand vacuum pump (e.g. -V.A.G 1390-)

Test sequence

– Remove engine cover -arrows-.

– Disconnect vacuum hose on mechanical exhaust-gas recirculation valve.

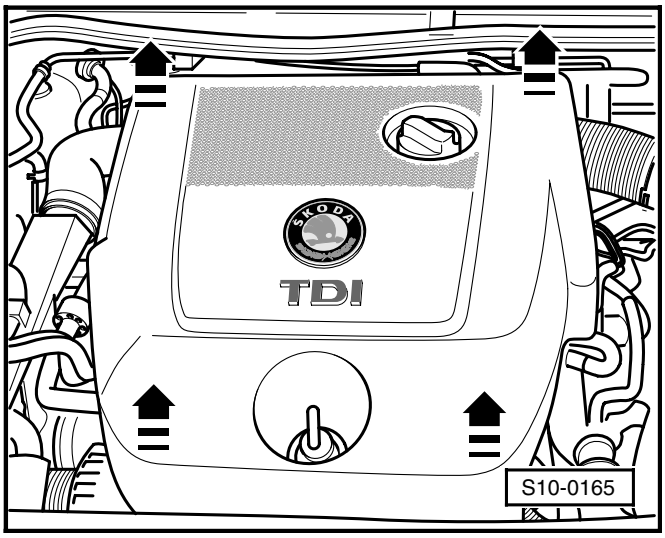

– Connect hand vacuum pump to valve and operate pump.

  Diaphragm must move in the direction of the pressure connection -arrow-.

– Detach hose of hand vacuum pump from mechanical exhaust gas recirculation valve.
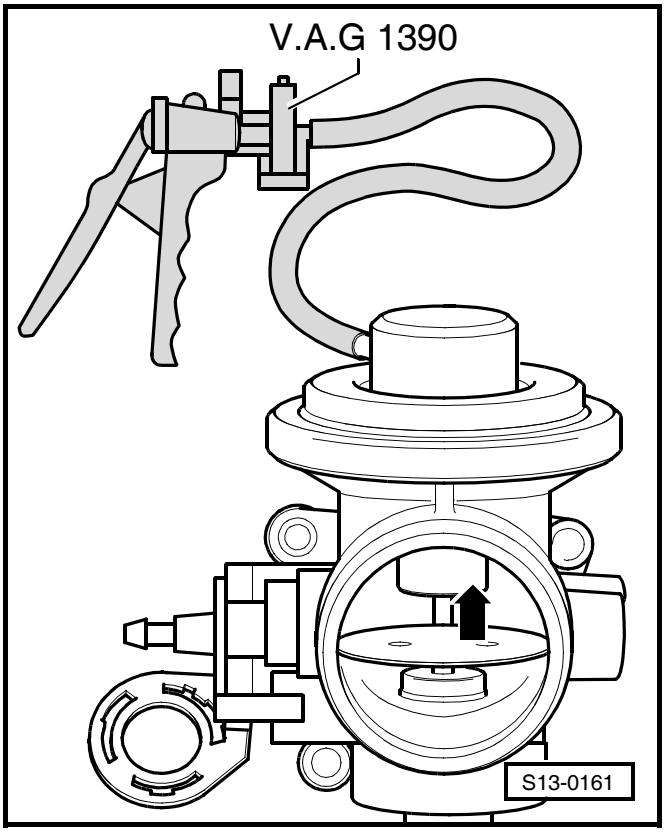
  Diaphragm must move back to its original position against the -direction of the arrow-.